ARYAN SCHOOL OF ENGINEERING & ECHNOLOGY

BARAKUDA, PANCHAGAON, BHUBANESWAR, KHORDHA-752050

LECTURE NOTE

SUBJECT NAME- ESTIMATION & COST EVALUATION-I

BRANCH-CIVIL ENGG.

SEMESTER-3RD SEM

ACADEMIC SESSION-2022-23

PREPARED BY- DIBYAJYOTI NAYAK

Estimate: Before undertaking the construction of a project it is necessary to know its probable cost which is worked out by estimating.

An estimate is a computation or calculation of the quantities required and expenditure likely to be incurred on the construction of a work.

The primary object of the estimate is to enable one to know before hand, the cost of the work. The estimate is the probable cost of a work and is determined theoretically by mathematically calculations based on the plans and drawing and current rates. Approximate estimate may be prepared by various methode but accurate estimate is prepared by Detailed estimate method

Actual cost: The actual cost of a work is known at the completion of the work. Amount of all expenditure is maintained day to day during execution of work in the account section and at the end of the completion of work when the account is completed, the actual cost is known. The actual cost should be not differ much from the estimated cost worked out at the begining.

An estimate is the anticipated or probable cost of a work and is usually prepared before the construction is taken up. Before undertaking any work or project it is necessary to know its probable cost which is obtained or derived by estimating.

Plinth Area Estimate

A covered built-up area measured at the floor level of any buildings storey or (at the floor level of the buildings basement) is called the plinth area. It is the measure of a building's useable area.

It is also known as the built-up area that is the whole area occupied by the building along with external and internal walls. It is usually 10% to 20% higher than the carpet area.

It should be computed bore the enclosed area by measuring the external buildings dimensions at the floor level. The courtyard and other opens areas will not include in the plinth area.

Floor Area

Floor area of a building is the total area of floor in between walls and consists of floor of all rooms verandahs passage corridors room, entrance halls, Kitchen, stores, bath and latrine (W.C) etc. Sills of doors and openings are not included in the Floor Area.

Floor Area is equal to plinth area minus area occupied by walls.

For deductions of wall area from plinth area to obtain floor area shall include - (i) Door and other openings in the wall, (ii) Intermediate pillars and supports (iii) Pilasters along walls exceeding 300 sq.cm in area, (iv) Flues with which are within walls.

Circulation Area: Circulation area is the floor area of verandahs, passage, corridors balconies, entrance hall, porches, staircase, etc which are used for movements of persons using the building. The circulation area of any floor shall compromise of the following:—

(a) Verandahs and balconies, (b) Passages and corridors, (c) Entrance halls, (d) staircase and mumties, (e) shafts for lift.

Scanned by CamScanner

The circulation area may be divided into two parts: (1) Horizontal circulation area and (2) Vertical circulation area.

Horizontal Circulation Area:

Horizontal area of a building is the area of verndahs, passage, corridors, balconies, porches etc. which are required for the horizontal movement of the users of the building. This may be 10% to 15% of the plinth area of the building.

Vertical Circulation Area:

Vertical circulation area of a building is the area or space occupied by staircases, lifts and the entrance halls adjacent to them which are required for vertical movement of the users of the building. This may be 4% to 5% of the plinth area of the buildings.

Carpet Area:

Carpet Area of building is the useful area or liveable area or lettable area. This is the total floor area minus the circulation area, verandahs, corridors, passages, staircase, lifts, entrance hall, etc. and minus other non-useable areas as sanitary accomodations, air condition room etc. For office building carpet area is the lettable area or useable area and for residential building carpet area is the liveable area and should exclude the kitchen, pantry, stores and similar other room which are not used for living purposes.

Units of measurements in metric system

Units of dimensions for materials and work

Particulars of Materials and Works	Dimensions metric system
1. Bricks, stone blocks, etc.	→ All dimensions cm
2. Files, slates, wallboard, glass panes, A.C. sheets, sheets etc	→ Length and breadth in cm or m. Thickness in mm
3. Door, windows etc	→ Height and breadth in cm or m
4. Parts of doors and windows as panels shutter	→ cm or mm.
5. Timber	→ Length in m and cross-sectional dimension in cm or mm
6. Masonry (brickwork, stone masonry, etc.)	→ Length and height in m. Thickness or breadth in cm.
7. Cement concrete, Lime concrete, R.C.C. flooring, etc	→ Length and breadth in m Thickness in cm
8. White washing, colour washing, Distempering, painting, etc	→ Length and breadth or height in m.
9. Aggregates, ballast, grit, sand, etc	→ size in mm.
10. Rolled steel sections as I-beam, channels, angle etc	→ Length in m, section in mm
11. Mild steel bars	→ Length in m, Dia. in mm

Scanned by CamScanner

Units of measurements and payements for various items of works and materials

Sl No	Particulars of item	Units of measurement in MKS	Units of payement in MKS	Units of payement in FPS
	1) Earthwork			
1.	Earthwork in excavation in ordinary soil earthwork in mixed soil with kankar, bajri etc earthwork in hard soil	cu.m	per 1. cum	% cuft
2.	Rock excavation	cu.m	per 1. cum	% cuft
3.	Earthfilling in excavation in foundation	cu.m.	per 1. cum	% cuft
4.	Earthfilling in foundation trenches	cu.m.	per 1. cum	% cuft
5.	Earthfilling in plinth	cu.m.	per 1 cum	% cuft
6.	Earthwork in banking, cutting in road and irrigation channel	cu.m.	per 1. cum	% cuft
7.	Surface dressing and levelling, cleaning etc.	sq.m	per sqm	% sqft
8.	Cutting of trees	no.	per no.	per no
9.	Puddling, puddle clay core	cu.m	per cu.m	% cuft
10.	Sand filling	cu.m	per cu.m	% cuft
11.	Quarrying of stone or boulders	cu.m	per cu.m	% cuft
12.	Blasting of rock (Blasted stone stacked and then measured)	cu.m	per cu.m	% cuft
	Concrete			
1.	Lime concrete in foundation	cu.m	per cu.m	% cuft
2.	Lime concrete in roof terracing, thickness specified	sq.m	per sq.m	% sq.ft
3.	cement concrete (C.C)	cu.m	per cu.m	per cu.ft
4.	Reinforced cement concrete (R.C.C)	cu.m	per cu.m	per cuft
5.	C.C. or R.C.C. chajja, sunshade	cu.m	per cum	per cuft
6.	Precast C.C. or R.C.C.	cu.m	per cu.m	per cuft
7.	cement concrete bed	cu.m	per cu.m	per cuft
	D.P.C			
8.	Damp proof course - cement concrete, Rich cement mortar, Asphalt, etc. in cement, lime or mud mortar	sq.m	per sq.m	% sqft
	Brickwork			
1.	Brickwork in foundation and plinth, in superstructure, in arches, etc. in cement lime or mud mortar	cu.m	per cu.m	% cuft
2.	Sundried brickwork	cu.m	per cu.m	% cuft
3.	Honey-comb brickwork, thickness specified	sq.m	per sq.m	% sq.ft
4.	Brickwork in jack arches, rf measured separately	cu.m.	per cu.m	% cuft
5.	Jack arch roofing including top finishing	sq.m	per sqm	% sq.ft
6.	Brickwork in well staining	cu.m	per cum	% sq.ft
7.	Half brickwork with or without reinforce-	sq.m	per sqm	% sqft
8.	Thin partition wall	sq.m	per sqm	% sqft

Scanned by CamScanner

S.l No	Particulars of Items	Units of measurement in MKS	Units of payment in MKS	Units of payment in FPS
8.	Thin partition wall	sq.m	per sq.m	ℓ. sq.ft
9.	Reinforced brickwork (R.B work)	cu.m	per cum	ℓ. cuft
10.	string course, drip course, weather course, coping etc (projection specified)	metre	per m	per rt ft
11.	cornice	metre	per m	per rt ft
12.	Brickwork in Fire place, chulla, chimney	cu.m	per cu.m	ℓ. cu.ft
13.	Pargetting chimney, fire place flue	metre	per m	per rt ft
14.	Brick edging	metre	per m	per rt ft

Stonework

1.	Stone masonry, Random rubble masonry coursed Rubble masonry, Ashlar masonry in walls, in arches, etc	cu.m	per cu.m	ℓ. cu.ft
2.	Cut stone work in lintel, beam etc.	cu.m	per cu.m	ℓ. cu.ft
3.	Stone slab in roof, shelve, etc. stone chhajja. stone, sunshed etc.	sq.m.	per sq.m	ℓ. sq.ft
4.	stonework in wall facing or lining	sq.m.	per sq.m	per sq.ft

Wood work

1.	Wood work, door & window frame or chowkhat, rafters, beams, roof trusses etc.	cu.m	per cu.m	per cu.ft
2.	Door and window shutters or leaves, panelled battens, glazed, part panelled and part glazed wire gauged, etc.	sq.m	per sq.m	per sq.ft
3.	Door and window fittings as hinges tower bolts sliding bolts, handles etc.	no.	per no.	per no.
4.	Timbering, boarding (Thickness specified)	sq.m	per sq.m	per sq.ft
5.	Timbering of trenches	sq.m	per sqm	per sq.ft
6.	Sawing of timber	sq.m	per sq.m.	per sq.ft
7.	Woodwork in partition, plywood, etc	sq.m.	per sq.m.	per sq.ft
8.	Ballies (Dia. specified)	metre	per m	per rt ft.

Steel work

1.	Rolled steel joists, channels, Angles, T-irons Flats, squares, rounds, etc	quintal	per q	per cwt
2.	steel reinforcements bars etc. in RCC. R.B. work	quintal	per q	per cwt
3.	Bending, binding of steel reinforcement	quintal	per q	per cwt
4.	Fabrication and hoisting of steel work	quintal	per q	per cwt
5.	Expended Metal (X.P.M.) size specified	sq.m	per sqm	per sq ft
6.	Fabric reinforcement, wire netting	sq.m	per sqm	per sq ft
7.	Iron work in struss	quintal	per q	per cwt
8.	Gusset plate (Min^m rectangular size from which cut)	quintal	per q	per cwt
9.	Cutting of Iron joists, channels	cm	per cm	per inch
10.	Threading in iron	cm	per cm	per inch
11.	Cutting angles, Tees, plate	sqcm	per sqcm	per sq inch

Scanned by CamScanner

12. Welding, soldern of sheets, plates	cm	per cm	per inch
13. Boring holes in iron	no.	per no.	per no.
14. Cast Iron (C.I) pipe. Dia specified	metre	per m	per ft
15. Rivets, Bolts, and nuts, Anchor bolts, Lewis bolts, Holding down bolts, etc.	quintal	per q	per cwt
16. Barbed wire fencing	metre	per m	per ft
17. Iron gate	sq m	per sqm	per sq ft
18. Iron hold fast	quintal	per q	per cwt
19. Iron railing (Height and type spec)	metre	per m	per ft
20. Iron grill, collapsible gate	sq.m	per sqm	per sqft
21. Steel doors and windows (type & fixing specified)	sq.m	per sqm	per sqft
22. Steel door and windows (type and fixing)	sq m	per sq m	per sqft

Roofing

1. Tiled roof: Allahabad tile, Faizabad tile Mangalore tile etc, including battens	Sqm	per sqm	per sqft
2. Country tile roof including bamboo jaffri	sq m	per sq m	per sqft
3. Corrugated iron (G.C.I) roof, Asbestos cement (A.C.) sheet roof	sq.m	per sq.m	per sq.ft
4. Slate roofing, timber roofing	sq.m	per sq.m	per sq ft
5. Mud roof: cover and inclusive of tiles or bricks	sq.m	per sqm	per sq.ft
6. Ridges, valleys, gutters	metre	per m	per ft
7. Expansion, contraction or construction joints	metre	per m	per ft
8. Ceiling - Timber, A.C. sheet plain, cloth cement plaster on XPM, paste board etc.	sq.m	per sq m	per sq ft

plastering, pointing and finishing

1. plastering - cement mortar, lime mortar, mud, etc. (Thickness, proportion specified)	sq.m	per sq.m	per sq ft
2. Pointing - struck, Flush, weather etc.	sq.m	per sqm	per sqft
3. Dado (Thickness and type specified)	sq.m	per sq.m	per sq.ft
4. Skirting (Thickness type and height specified)	metre	per m	per ft
5. Cement mortar or lime mortar rubbing	sq.m	per sq.m	per sq ft
6. White washing, colour washing, cement washing (No. of coat spec)	sq.m	per sqm	per sqft
7. Distempering (No. of coat specified)	sq.m	per sq.m	per sq.ft
8. Snow cement washing or finishing	sq.m	per sqm	per sqft
9. painting, varnishing (No. of coat spec)	sq.m	per sqm	per sqft
10. polishing of wood work (No. of coat spec)	sq.m	per sq.m	per sqft
11. painting letters and figure (Ht spec)	no.	per no.	per no.

Scanned by CamScanner

12. Oiling and cleaning of doors and windows	sq m	per sq.m	% sq.ft
13. Coal tarring (No. of coat specified)	sq.m	per sq m	% sq.ft
14. Removing of paint or varnish	sq m	per sq.m	% sq.ft
15. Gobri Lapping (cow dung wash)	sq.m	per sq m	% sq ft

Flooring

1. 2.5cm (1") C.C. over 7.5cm (3") L.C. floor (including L.C.)	sq.m	per sq m	% sq.ft
2. Conglomeriate floor, artificial patent stone floor 2.5cm (1") C.C. over 7.5cm (3") L.C. including L.C.)	sq m	per sq m	% sq.ft
3. 4cm (1½") thick stone floor flag stone floor over 7.5cm (3") L.C. (including L.C.)	sq.m	per sq.m	% sq ft
4. 2.5cm (1") marble flooring over 7.5 cm (3") L.C. (including L.C.)	sq m	per sq.m	% sq ft
5. Mosaic or terrazo on granolithic floor over 7.5 cm (3") L.C. (including L.C.)	sq.m	per sq.m	per sq.ft
6. Brick flat floor over 7.5cm (3") L.C. including L.C.)	sq.m	per sq.m	% sq ft
7. Brick on edge floor over 7.5cm (3") L.C. including	sq.m	per sq.m	% sq.ft
8. 2.5cm (1") on 4cm (1½") C.C. floor	sq.m	per sq.m	% sq.ft
9. Mud flooring finished gobri lepping	sq.m	per sq m	% sq ft
10. Apron on plinth protection	sq.m	per sq.m	% sq.ft
11. Door and window sill (C.C. on cement mortar plastered)	sq.m	per sqm.	% sq ft

Method of building estimate

Ex.1 Estimate the quantities of brickwork and plastering required in a wall 4m long, 3m high and 30cm thick. Calculate also the cost if the rate of brickwork is Rs. 320.00 per cu.m and of plastering is Rs. 8.50 per sq.m.

Ans (Quantity of brickwork = L X B X H = 4m X 3m X 0.30 = 3.6 cu.m
Quantity of plastering (two faces) = 2 X L X H = 2 X 4m X 3m = 24 sqm
cost of brickwork = 3.6 X 320.00 = Rs. 1152.00
cost of plastering = 24 X 8.50 = Rs. 204.00
Total cost = 1152.00 + 204.00 = Rs. 1136.00.

Ex.2 Prepared a detailed estimate of part of a wall of a building from the given plan and section and general specification (Fig 2.1 and 2.2)

General specification

(i) Foundation concrete shall be of lime concrete
(ii) Foundation and plinth shall be of 1st class brickwork in lime mortar
(3) Damp proof course – 2.5mm C.C. 1:1½:3 with water proofing compound
(4) Superstructure – 1st class brickwork in lime mortar
(5) Wall finishing. Inside wall 12mm cement plastered 1:6 and white wash 3 coats.

Scanned by CamScanner

Plan and Section

Fig. 2-1

WALL WITH STANDARD MODULAR BRICKS.

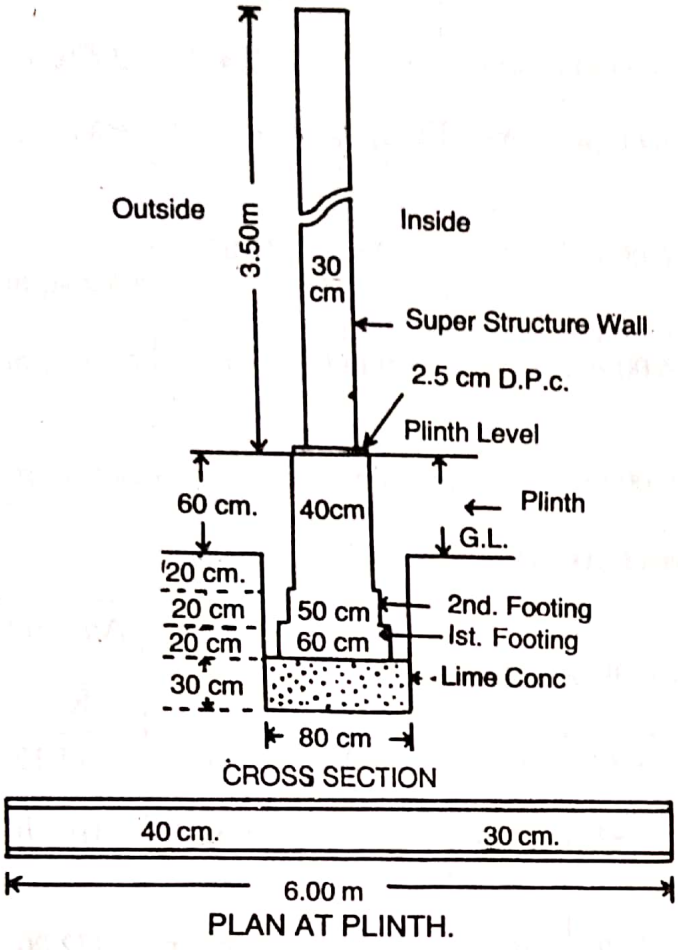

Fig. 2-2

WALL WITH TRADITIONAL BRICKS.

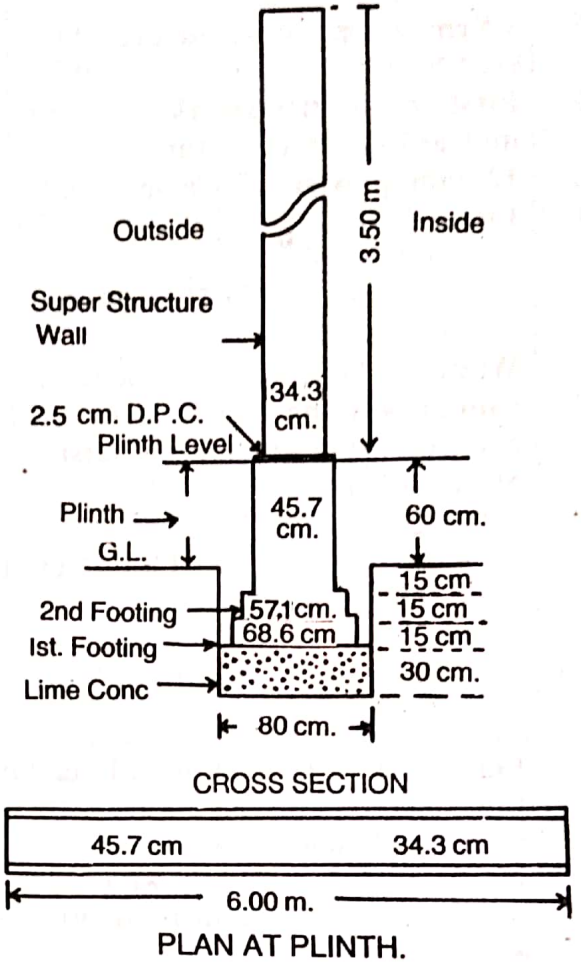

Scanned by CamScanner

Outside wall 12mm cement plastered 1:6 including 10cm below ground level and finished with 2 coat of colour wash over one coat of white washing.

80m

Item No	Description of item of work	No.	Dimensions Length	Breadth	Ht. or Depth	Quantities or contents	Total quantity
1.	Earthwork in excavation in boundation	1	6.00m	0.80m	0.90m	4.32	4.32 cum
2.	Lime concrete in boundation	1	6.00m	0.80m	0.30m	1.44	1.44 cum
3.	1st class brickwork in lime mortar in boundation and plinth						
	1st footing	1	6.00m	0.60m	0.20m	0.72	
	2nd footing	1	6.00m	0.50m	0.20m	0.60	
	plinth wall up to G.L.	1	6.00m	0.40m	0.20m	0.48	
	plinth wall above G.L.	1	6.00m	0.40m	0.60m	1.44	
						Total: 3.24 cum	
4.	2.5cm Damp proof course (D.P.C) c.c. 1:1½:3	1	6.00m	0.40m	—	2.4	2.4 sq.m
5.	1st class brickwork in lime mortar for superstructure	1	6.00m	0.30m	—	6.3	6.3 sq.m
6.	12mm plaster of cement sand 1:6						
	Inside	1	6.00m	—	3.50m	21.0	
	outside including 10cm below G.L	1	6.00m	—	4.20m	25.2	
						Total: 46.2 sq.m	
7.	white washing 3 coats (inside)	1	6.00m	-	3.50	21.0	21.0 sq.m
8.	colour washing 2 coats over one coat of white washing (outside above G.L.)	1	6.00m	-	4.10m	24.6	24.6 sq.m

ABSTRACT OF ESTIMATE COST

Item No.	Description of item of work	Quantity	Unit	Rate Rs.	Per	Amount Rs.
1.	Earthwork in excavation in boundation	4.32	cu.m	350.00	% cu.m	15.12
2.	Lime concrete in boundation with white lime, surkhi and brick ballast	1.44	cu.m	220.00	per cu.m	316.80
3.	1st class brickwork with white lime and surkhi mortar 1:2 in boundation and plinth	3.24	cu.m	300.00	per cu.m	972.00
4.	2.5cm thick c.c. 1:1½:3 Damp proof course with water proofing compaun	2.4	sq.m	20.00	per sq.m	48.00
5.	1st class brickwork with white lime and surkhi 1:2 mortar in superstructure	6.3	cu.m	320.00	per cu.m	2016.00
6.	12mm cement and local sand plaster 1:6	46.2	sq.m	8.50	per sq.m	292.00
7.	White washing 3 coats	21.0	sq.m	0.75	per sq.m	15.75
8.	colour washing 2 coats over one coat of white washing	24.6	sq.m	0.82	per sq.m	20.17

Scanned by CamScanner

Total	3796.54
Add for contigencies 3%.	113.90
Add for workcharged Establishment 2½%	95.93
Grand Total	3986.37

Method of building estimate

Method I

Separate or individual wall method:- In this method, measurement out the external length of walls running in the longitudinal direction generally the long walls out-to-out, and the internal lengths of walls running in the transverse direction in-to-in i.e. of cross or short walls in-to-in and calculate quantities multiplying the length by the breadth and the height of wall.

Longwall length out-to-out = centre to centre length + half breadth on one otherside = centre to centre length of one breadth)

short wall length in-to-in = centre to centre length − one breadth.

Ex. 3.(a) Fig 2.3, the plan represents the plan of superstructure wall of a single room building of 5m×4m, and sections represent the cross-sections of the walls with foundation.

Estimate the quantities of −

1. Earthwork in excavation in foundation,
2. Concrete in foundation
3. Brickwork in foundation and plinth and
4. Brickwork in superstructure.

The length of longwall centre to centre = $5.00 + \frac{1}{2}\times 0.30 + \frac{1}{2}\times 0.30 = 5.30$m.

The length of short wall centre to centre = $4.00 + \frac{1}{2}\times 0.30 + \frac{1}{2}\times 0.30 = 4.30$m

Item No.	Particulars of item	No.	Length in m	Breadth in m	Height or Depth in m	Quantity	Explanatory note
1.	Earthwork in excavation in foundation −						
	Longwall	2	6.20	0.90	0.90	10.04	L = 5.3 + 0.9 = 6.20m
	short wall	2	3.40	0.90	0.90	5.51	L = 4.30 − 0.90 = 3.40m
					Total =	15.55 cu.m	
2.	Concrete in foundation −						
	Longwall	2	6.20	0.90	0.30	3.35	Length same as excavation quantity
	short wall	2	3.40	0.90	0.30	1.83	
					Total =	5.18 cu.m	
3.	Brickwork in foundation and plinth −						
	Longwall −						
	1st footing	2	5.90	0.60	0.30	2.13	L = 5.3 + 0.6 = 5.90m
	2nd footing	2	5.80	0.50	0.30	1.74	L = 5.3 + 0.5 = 5.80m
	plinth walls	2	5.70	0.40	0.60	2.74	L = 5.3 + 0.4 = 5.70m
	short wall −						
	1st footing	2	3.70	0.60	0.30	1.33	L = 4.3 − 0.60 = 3.70m
	2nd footing	2	3.80	0.50	0.30	1.14	L = 4.30 − 0.50 = 3.80m
	plinth walls	2	3.90	0.40	0.60	1.87	L = 4.3 − 0.40 = 3.90m
					Total =	10.95 cu.m.	

Scanned by CamScanner

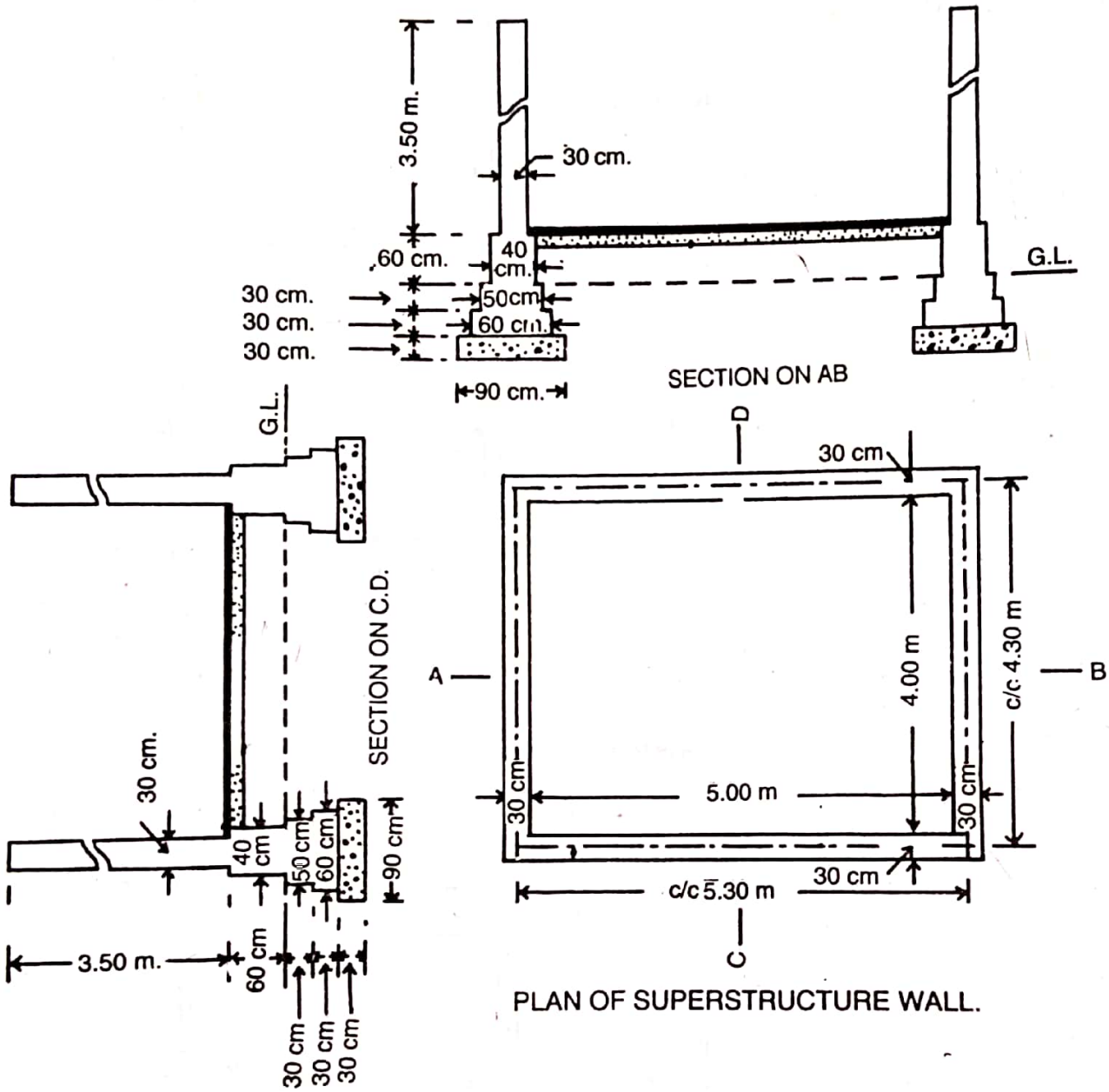

Fig. 2-3

Scanned by CamScanner

TWO ROOMED BUILDING

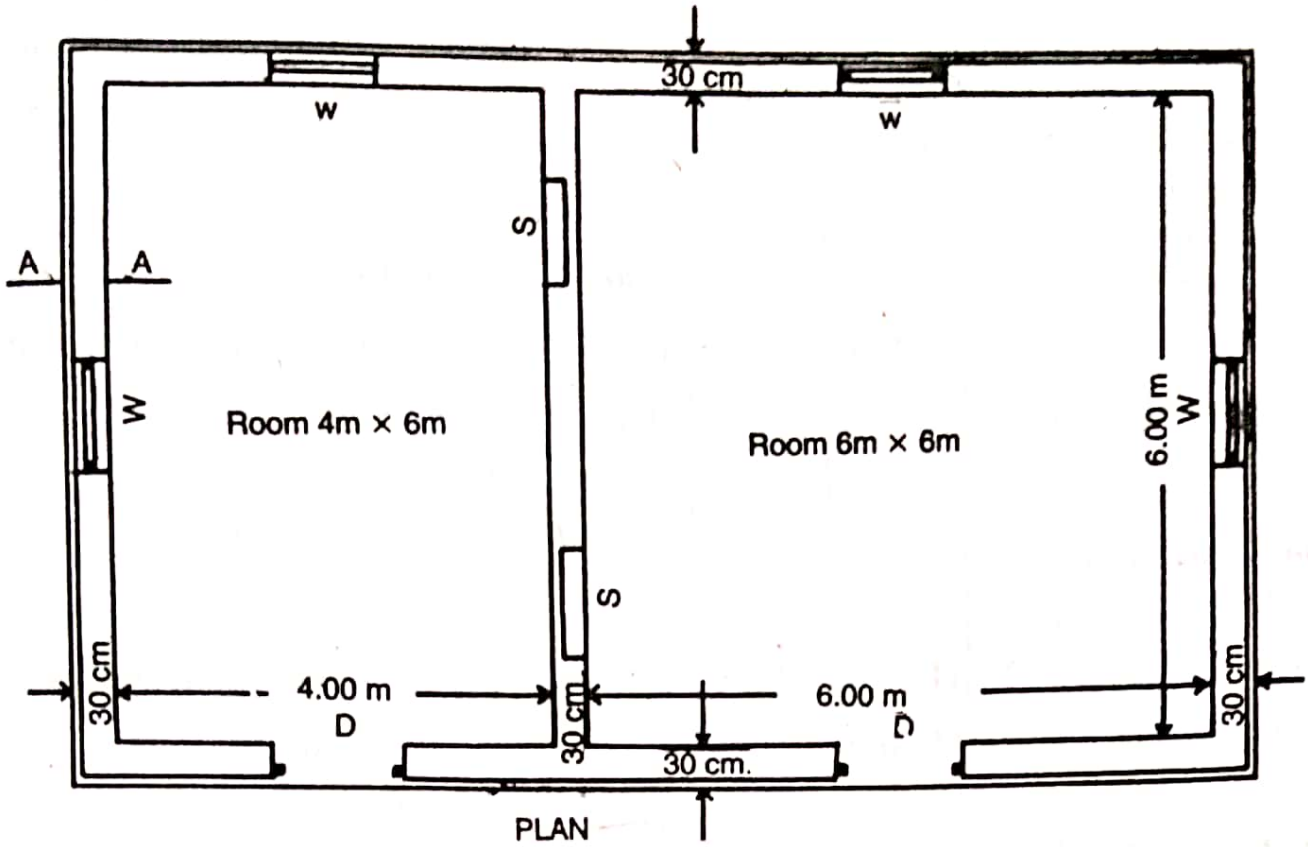

PLAN

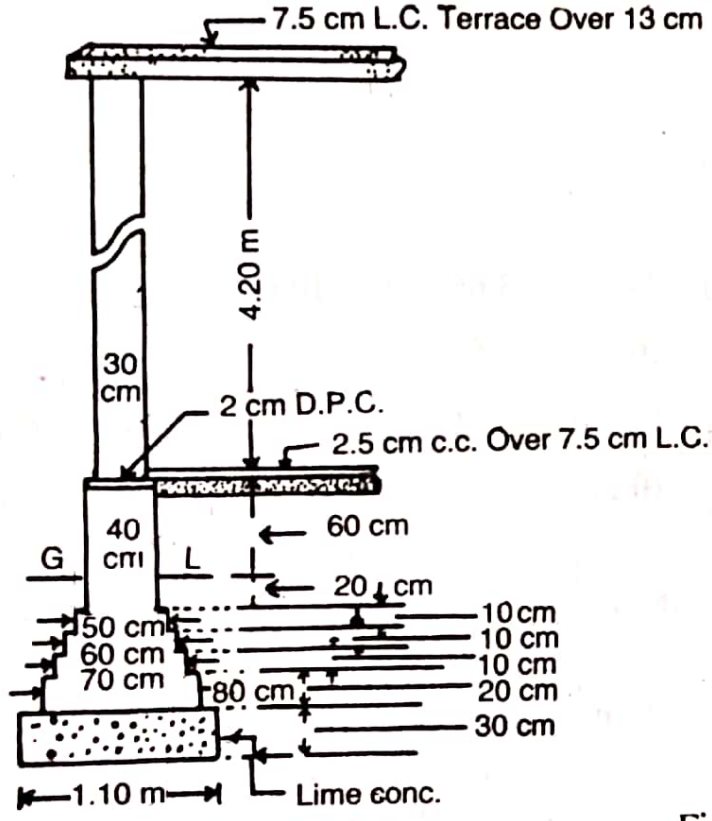

CROSS SECTION OF WALL ON AA.

All Walls are of same section
Lintels over Doors. Windows and
Shelves are 15 cm thick R.B.

Doors D-1.20 m × 2.10 m
Windows W-1.00 × 1.50 m
Shelves S-1.00 m × 1.50 m

Fig. 2-6

No beam has been shown in the plan as the object of this example is to explain the

Scanned by CamScanner

Item No	Particulars of item	No.	Length in m	Breadth in m	Height in m	Quantity	Explantory note
A.	Brickwork in superstructure						
	Longwalls	2	5.60	0.30	3.50m	11.76	L = 5.3 + 0.3 = 5.60 m
	short walls	2	4.00	0.30	3.50 m	8.40	L = 4.3 − 0.3 = 4.0 m
					Total =	20.16 cu.m	

Ex. 4(a)

Estimate the quantities of the following items of a two roomed building from the given plan and section (Fig 2.6)

(1) Earthwork in excavation in foundation
(2) Lime concrete in foundation
(3) 1st class brickwork in cement mortar 1:6 in foundation and plinth
(4) 25cm c.c. damp proof course and
(5) 1st class brickwork in lime mortar in superstructure

Ans

Item No	Particulars of item	No.	Length in m	Breadth in m	Height or Depth	Quantity	Explantory note
							Long wall, c/c length = 4 + 6 + 0.30 + 2 × 0.30/2 = 10.60m short wall & inter wall c/c length = 6 + 2 × 0.30/2 = 6.30m
1.	Earthwork in excavation in foundation						
	Long walls	2	11.70	1.10	1.00	25.74	L = 10.60 + 1.10 = 11.70m
	short walls	3	5.20	1.10	1.00	17.16	L = 6.30 − 1.10 = 5.20m
					Total =	42.90 cu.m	
2.	Lime concrete in foundation —						
	Long walls	2	11.70m	1.10	0.30	7.72	Lengths same as for excavation
	short walls	3	5.20m	1.10	0.30	5.15	
					Total =	12.87 cu.m	
3.	1st class brickwork in 1:6 cement mortar in foundation and plinth						
	Long walls -						
	1st footing	2	11.40m	0.80m	0.20m	3.65	L = 10.60 + 0.80 = 11.40m
	2nd footing	2	11.30	0.70	0.10	1.58	L = 10.60 + 0.70 = 11.30m
	3rd footing	2	11.20	0.60	0.10	1.34	L = 10.60 + 0.60 = 11.20m
	4th footing	2	11.10	0.50	0.10	1.11	L = 10.6 + 0.50 = 11.10m
	plinth wall above footing	2	11.00	0.40	0.80	7.04	L = 10.6 + 0.4 = 11.00m
	short walls						
	1st footing	3	5.50	0.80	0.20	2.64	L = 6.30 − 0.80 = 5.50m
	2nd footing	3	5.60	0.70	0.10	1.18	L = 6.30 − 0.70 = 5.60m
	3rd footing	3	5.70	0.60	0.10	1.03	L = 6.30 − 0.60 = 5.70m
	4th footing	3	5.80	0.50	0.10	0.87	L = 6.30 − 0.50 = 5.80m
	plinth wall above footing	3	5.90	0.40	0.80	5.66	L = 6.30 − 0.40 = 5.90m
					Total =	26.10 cu.m	
4.	Damp proof course 25cm thick c.c. -						
	Long walls	2	11.00	0.40	-	8.80	Lengths same as for plinth wall in item 3
	short wall	3	5.90	0.40	-	7.08	
					Total =	15.88	
	Deduct door sill	2	1.20	0.40	-	0.96	
					Net Total =	14.92 sq.m	

Scanned by CamScanner

Item No	Particulars of items	No.	Length in m	Breadth in m	Height in m	Quantity	Explanatory note.
5.	1st class brickwork in lime mortar in super structure.						
	long walls	2	10.90	0.30	4.20	27.47	L = 10.6 + 0.3 = 10.90 m
	short walls	3	6.00	0.30	4.20	22.68	L = 6.30 − 0.30 = 6.00 m
					Total =	50.15 cu.m	
	Deduct:-						
	Door openings	2	1.20	0.30	2.10	1.51	
	window openings	4	1.00	0.30	1.50	1.80	
	shelves	2	1.00	0.20	1.50	0.60	Back of shelves 10cm thick wall
	Lintel over doors	2	1.50	0.30	0.15	0.14	Bearing 15cm
	Lintel over windows	4	1.30	0.30	0.15	0.23	Bearing 15cm
	Lintels over shelves	2	1.30	0.30	0.15	0.12	Bearing 15cm
					Total of deduction	4.40 cu.m	
					Net Total	= 45.75 cu.m.	

Ex.5(a) Estimate the quantities of the following items of a residential building from the given drawing (Fig 2.7):
(1) Earthwork in excavation in foundation
(2) Lime concrete in foundation
(3) First class brickwork 1:6 cement sand mortar in foundation and plinth
(4) 2.5cm Damp proof course,
(5) First class brickwork in lime mortar in superstructure.

Ans Drawing and left hand side bed room combined -
C. to C. long walls = 6.00 + 1.00 + 0.30 + 2×0.15 = 10.60 m
C. to C. short walls = 5.00 + 2×0.15 = 5.30 m.

Bed rooms right side (both) combined
C. to C. long walls = 5.00 + 4.00 + 0.30 + 2×0.15 = 9.60 m
C. to C. short walls = 4.50 + 2×0.15 = 4.80 m

Front Verandah
Front wall C. to C. length = $5.00 + 4.00 + 2\times0.3 + \frac{0.30}{2} - \frac{0.20}{2}$ = 9.65 m
side wall C. to C. length = $2.00 + \frac{0.30}{2} + \frac{0.20}{2}$ = 2.25 m

Back verandah including bath room
C. to C. long wall (rear wall including bath room) 9.65 m same as front verandah
C. to C. length of side wall of bath room = $2.50 + \frac{0.30}{2} + \frac{0.20}{2}$ = 2.75 m

Scanned by CamScanner

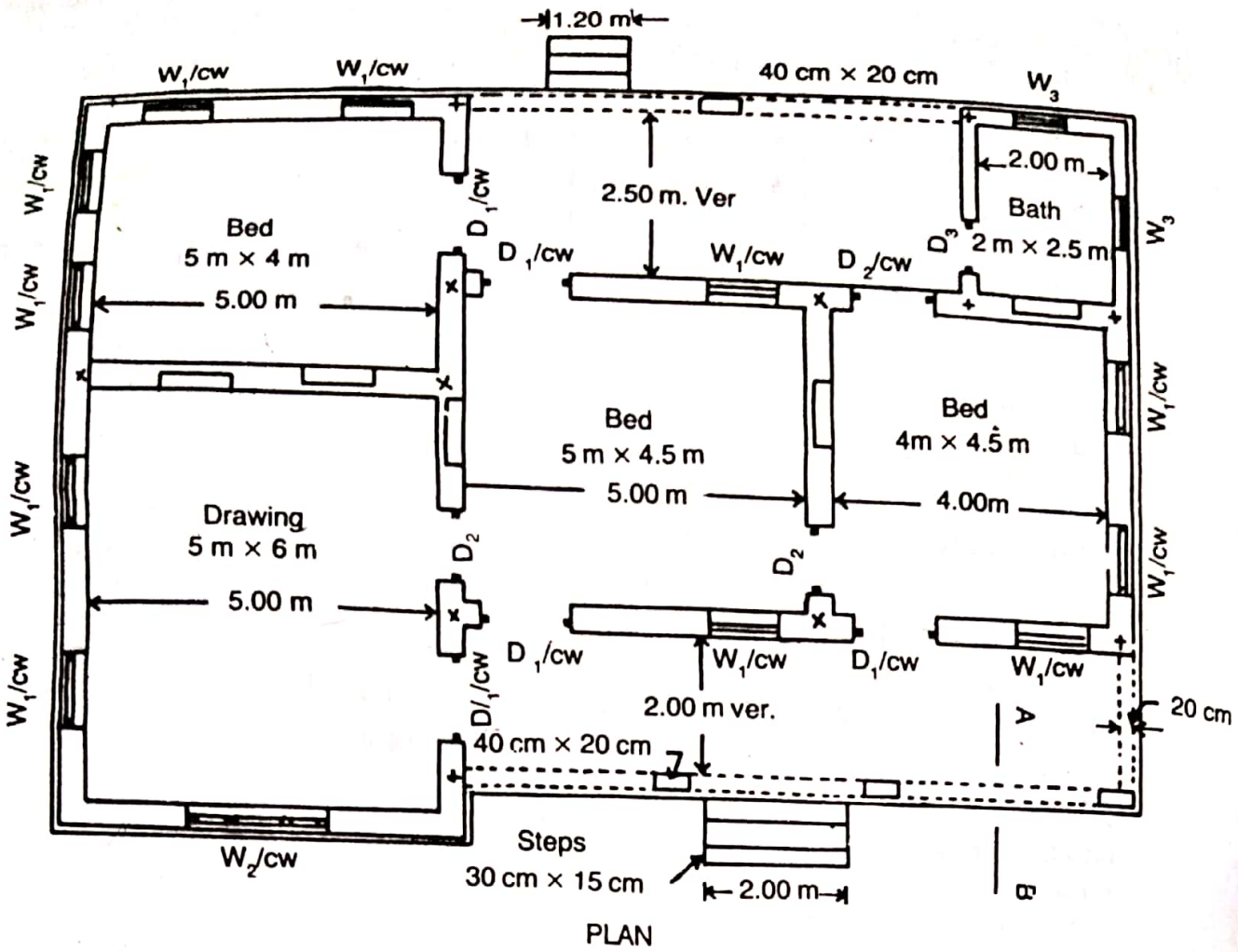

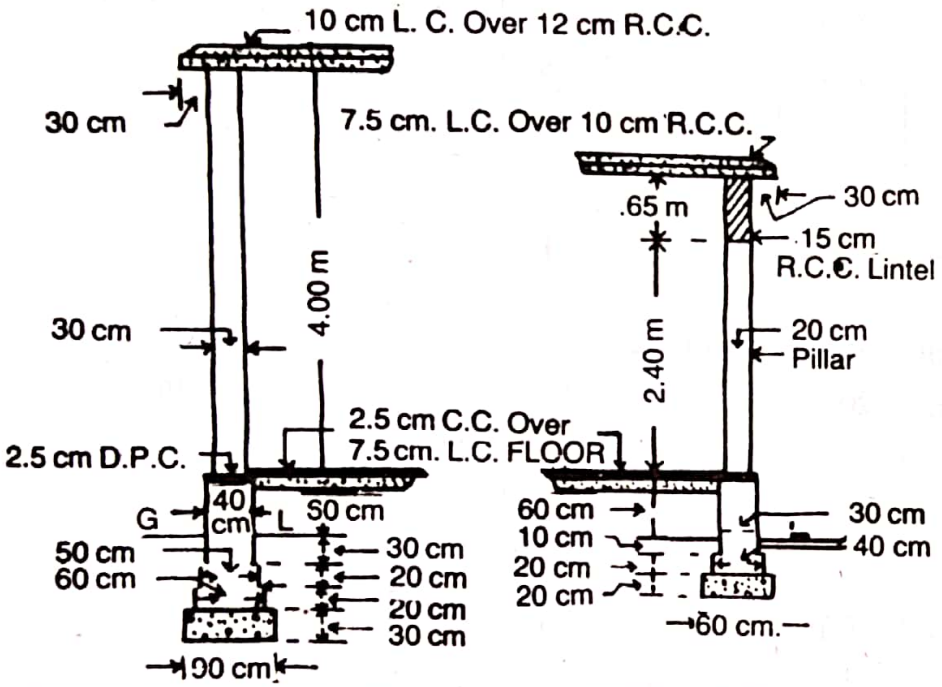

CROSS SECTION OF MAIN WALLS

CROSS SECTION AB OF VER.WALL

Doors:-

D_1 – 120 cm × 210 cm (1.20 m × 2.10 m)

D_2 – 100 cm × 200 cm (1.00 m × 2.00 m)

D_3 – 75 cm × 180 cm (.75 m × 1.80 m).

Windows:-

W_1 – 100 cm × 150 cm (1.00 m × 1.50 m)

W_2 – 200 cm × 150 cm (2.00 m × 1.50 m)

W_3 – 75 cm × 120 cm (.75 m × 1.20 m)

C.W. – 75 cm × 60 cm (.75 m × .60 m).

Shelves:-

S – 100 cm × 150 cm (1.00 m × 1.50 m)

Lintel Over Doors, Windows Etc.

15 cm R.B.

All walls of Drawing Rooms and Bed Rooms have same section

Bath Room walls have similar section.

Note—*No beam has been shown in the plan.*

Fig. 2-7

Scanned by CamScanner

Item No.	Particulars of Item	No.	Length in m	Breadth in m	Height in m	Quantity	Explanatory Note
1.	Earthwork in excavation in foundation —						
	Drawing room and left bedroom						
	Long walls	2	11.50	0.90	1.00	20.70	L = 10.60 + 0.90 = 11.50 m
	short walls	3	4.40	0.90	1.00	11.88	L = 5.30 − 0.90 = 4.40 m
	Bedroom right side (both)						
	Long walls	2	9.60	0.90	1.00	17.28	$L = 9.60 - \frac{0.90}{2} + \frac{0.90}{2} = 9.60$ m
	short walls	2	3.90	0.90	1.00	7.02	L = 4.80 − 0.90 = 3.90 m
	Front Verandah						
	Front long wall	1	9.50	0.60	0.50	2.85	$L = 9.65 - \frac{0.90}{2} + \frac{0.60}{2} = 9.50$ m
	side short wall	1	1.50	0.60	0.50	0.45	$L = 2.25 - \frac{0.90}{2} - \frac{0.60}{2} = 1.50$ m
	Back verandah including bath room						
	Long wall (rear wall including bath)	1	9.50	0.60	0.50	2.85	$L = 9.65 - \frac{0.90}{2} + \frac{0.60}{2} = 9.50$ m
	short walls (remaining walls of bath)	2	2.00	0.60	0.50	1.20	$L = 2.75 - \frac{0.90}{2} - \frac{0.60}{2} = 2.00$ m
					Total:	64.23 cu.m	
2.	Lime concrete in foundation — Drawing and left bedroom						
	Long walls	2	11.50	0.90	0.30	6.21	L same as for earthwork in excavation
	short walls	3	4.40	0.90	0.30	3.56	
	Bedroom right side (both)						
	Long walls	2	9.60	0.90	0.30	5.18	L same as for earthwork in excavation.
	short walls	2	3.90	0.90	0.30	2.11	
	Front Verandah						
	Front long wall	1	9.70	0.60	0.20	1.16	$L = 9.65 - \frac{0.50}{2} + \frac{0.60}{2} = 9.70$ m
	side short wall	1	1.70	0.60	0.20	0.20	$L = 2.25 - \frac{0.50}{2} - \frac{0.60}{2} = 1.70$ m
	Back verandah including bath room						
	Long wall including bath	1	9.70	0.60	0.20	1.16	$L = 9.65 - \frac{0.50}{2} + \frac{0.60}{2} = 9.70$ m
	short wall (remaining walls of bath)	2	2.20	0.60	0.20	0.53	$L = 2.75 - \frac{0.50}{2} - \frac{0.60}{2} = 2.20$ m
					Total:	20.11 cu.m	
3.	1st class brickwork in foundation and plinth 1:6 cement mortar						
	Drawing and left bedroom						
	Long walls 1st footing	2	11.20	0.60	0.20	2.69	L = 10.60 + 0.60 = 11.20 m
	2nd footing	2	11.10	0.50	0.20	2.22	L = 11.20 − 2×0.05 = 11.10 m
	plinth wall above footing	2	11.00	0.40	0.90	7.92	L = 11.10 − 0.10 = 11.00 m
	short walls —						
	1st footing	3	4.70	0.60	0.20	1.69	L = 5.30 − 0.60 = 4.70 m
	2nd footing	3	4.80	0.50	0.20	1.44	L = 4.70 + 2×0.05 = 4.80 m
	plinth wall above footing	3	4.90	0.40	0.90	5.29	L = 4.80 + 0.10 = 4.90 m
	Bedroom right side (both)						
	Long wall — 1st footing	2	9.60	0.60	0.20	2.31	$L = 9.60 - \frac{0.6}{2} + \frac{0.6}{2} = 9.60$ m
	2nd footing	2	9.60	0.50	0.20	1.92	$L = 9.60 - \frac{0.50}{2} + \frac{0.50}{2} = 9.60$ m
	plinth wall above footing	2	9.60	0.40	0.90	8.91	$L = 9.60 - \frac{0.40}{2} + \frac{0.40}{2} = 9.60$ m
	short wall						
	1st footing	2	4.20	0.60	0.20	1.01	L = 4.80 − 0.60 = 4.20 m
	2nd footing	2	4.30	0.50	0.20	0.86	L = 4.20 + 2×0.05 = 4.30 m
	plinth wall above footing	2	4.40	0.40	0.90	3.17	L = 4.30 + 0.10 = 4.4 m

Scanned by CamScanner

Item No	Particulars of item	No.	Length in m	Breadth in m	Height in m	Quantity	Explanatory Note
	short wall –						
	1st footing	2	4.20	0.60	0.20	1.01	L = 4.20 - 0.60 = 4.20m
	2nd footing	2	4.30	0.50	0.20	0.86	L = 4.20 + 2×0.05 = 4.30m
	plinth wall above footing	2	4.40	0.40	0.90	3.17	L = 4.30 + 10 = 4.40m
	Front verendah						
	Front wall Footing	1	9.65	0.40	0.20	0.77	$L = 9.65 - \frac{0.40}{2} + \frac{0.40}{2} = 9.65m$
	plinth wall above footing	1	9.60	0.30	0.70	2.02	$L = 9.65 - \frac{0.40}{2} + \frac{0.30}{2} = 9.60m$
	side short wall Footing	1	1.25	0.40	0.20	0.15	$L = 2.25 - \frac{0.4}{2} - \frac{0.4}{2} = 1.85m$
	plinth wall above footing	1	1.90	0.30	0.70	0.40	$L = 2.25 - \frac{0.4}{2} - \frac{0.3}{2} = 1.90m$
	Back verendah including bath room –						
	Long wall Footing	1	9.65	0.40	0.20	0.77	} Length same as for front verendah longwall
	plinth wall above footing	1	9.60	0.30	0.70	2.02	
	short walls (remaining walls of bath) Footing	2	2.35	0.40	0.20	0.38	$L = 2.75 - \frac{0.40}{2} - \frac{0.40}{2} = 2.35m$
	plinth wall above footing	2	2.40	0.30	0.70	1.01	$L = 2.75 - \frac{0.40}{2} - \frac{0.30}{2} = 2.40m$
					Total =	44.95 cu.m	
4.	2.5cm Damp proof course						
	Drawing and left bedroom –						
	Long walls	2	11.00	0.4	—	8.80	L same as plinth wall
	short walls	3	4.90	0.4	—	5.88	L same as plinth wall
	Bedrooms inner side						
	Long walls	2	9.60	0.4	—	7.68	L same as plinth wall
	short walls	2	4.40	0.4	-	3.52	L same as plinth wall
	Verendah pillars	4	0.50	0.3	-	0.60	5cm extra on all sides
	Bathroom						
	Rear wall	1	2.50	0.30	-	0.75	L = 2.20 + 2×0.15 = 2.50m
	side and inter walls	2	2.40	0.30	-	1.44	
					Total =	28.67 sq.m	
	Deduct –						
	Door sill D_1	6	1.20	0.40	—	2.88	
	Door sill D_2	2	1.00	0.40	—	0.80	
	Door sill D_3	1	0.75	0.30	-	0.23	
					Total deduction	3.91 sq.m	
					Net total =	24.76 sq.m	
5.	1st class brickwork in superstructure in lime mortar						
	Drawing + left bedroom						
	Long walls	2	10.90	0.30	4.0	26.16	L = 10.60 + 0.30 = 10.90m
	short walls	3	5.0	0.30	4.0	18.00	L = 5.3 - 0.3 = 5.0m
	Bedroom right side						
	Long walls	2	9.60	0.30	4.0	23.04	$L = 9.60 - \frac{0.3}{2} + \frac{0.3}{2} = 9.6m$
	short walls	2	4.50	0.30	4.0	10.80	L = 4.80 - 0.30 = 4.50m
	Front verendah						
	Front wall as solid	1	9.60	0.20	3.05	5.86	$L = 9.65 - \frac{0.3}{2} + \frac{0.2}{2} = 9.60m$
	side wall as solid	1	2.00	0.20	3.05	1.22	

Scanned by CamScanner

Item No	Particulars item of work	No.	Length in m	Breadth in m	Height in m	Quantity	Explanatory note
	Back verandah including bath —						
	Back longwall as solid	1	9.60	0.20	3.05	5.86	L same as front verandah.
	side and inter walls of bath	2	2.50	0.20	3.05	3.05	
					Total	93.99 cu m	
	Deduct:						
	Door openings						
	D openings D_1	6	1.20	0.30	2.10	4.54	
	D. opening D_2	2	1.00	0.30	2.00	1.20	
	D opening D_3	1	0.75	0.20	1.80	0.27	
	Window openings						
	W openings W_1	11	1.00	0.30	1.50	4.95	
	W opening W_2	1	2.00	0.30	1.50	0.90	
	W. opening W_3	2	0.75	0.20	1.20	0.36	
	clerestory window (C.W) openings	18	0.75	0.30	0.60	2.43	
	shelves openings	5	1.00	0.20	1.50	1.50	Back of shelves 10cm thick wall
	Front verandah openings in between pillars	1	8.40	0.20	2.40	4.03	L = 9.60 - 3X0.40 = 8.40 m
	Front verandah opening side	1	2.00	0.20	2.40	0.96	
	Back verandah opening	1	6.20	0.20	2.40	3.26	L = 9.60 - 2.40 - 0.40 = 6.20m
	Lintels —						
	Over doors						
	D. over D_1	6	1.50	0.30	0.15	0.405	Bearing 15cm
	D. over D_2	2	1.30	0.30	0.15	0.117	Bearing 15cm
	D. over D_3	1	0.95	0.20	0.15	0.029	Bearing 10cm
	Over windows						
	W. window W_1	11	1.30	0.30	0.15	0.644	Bearing 15cm
	W. window W_2	1	2.30	0.30	0.15	0.103	Bearing 15cm
	O. window W_3	2	0.95	0.20	0.15	0.057	Bearing 10cm
	over C.W.	18	0.95	0.30	0.15	0.770	Bearing 10cm
	over shelves	5	1.30	0.30	0.15	0.293	Bearing 15cm
	Verandah lintels						
	Front	1	9.75	0.20	0.15	0.292	L = 9.60 + 0.15 = 9.75m
	side	1	2.15	0.20	0.15	0.065	L = 2.00 + 0.15 = 2.15 m
	Back	1	7.50	0.20	0.15	0.225	L = 9.60 - 2.40 + 2X0.15 = 7.50 m
					Total deduction	27.401	cu m
					Net total	= 66.59	cu m

Scanned by CamScanner

METHOD-II

Centreline method: In this method known as centre line method sum- total length of centre lines of walls, long and short, has to be found out. Find the total length of centre lines of walls, of same type, long and short having same type of foundations and footings and then find the quantities by multiplying the total centre length by the respective breadth and the height.

In this method, the length will remain same for excavation in foundation, for concrete in foundation, for all footings and for superstructure. This method is quick but requires special attention and consideration at the junctions, meeting points of partition or cross walls, etc.

For rectangular, circular, polygonal, hexagonal, octagonal, etc building having no inter or cross walls, this method is quite simple. For buildings having cross or partition walls, for every junction of partition or cross walls with main walls, special consideration shall have to be made to bind the correct quantity. For each junction half breadth of -respective item or footing is to be deducted from the total centre lengths.

Ex. 3(b) Estimate by centre line method the quantities of the following items of a single room building Fig 2.3 (i) Earthwork in excavation in foundation, (ii) Concrete in foundation, (iii) Brickwork in foundation and plinth (iv) Brickwork in superstructure

Ans Total centre length of walls = 5.30 + 4.30 + 5.30 + 4.30 = 19.20 m.

Item No.	Particulars of item	No.	Length in m	Breadth in m	Height in m	Quantity	Explantory notes
1.	Earthwork in excavation in foundation	1	19.20	0.90	0.90	15.55 cu.m	Total centre length of all walls = 19.20 m
2.	Concrete in foundation	1	19.20	0.90	0.30	5.18 cu.m	
3.	Brickwork in foundation and plinth						
	1st footing	I	19.20	0.60	0.30	3.46	
	2nd footing	1	19.20	0.50	0.30	2.88	
	plinth wall	1	19.20	0.40	0.60	4.61	
					Total:-	10.95 cu.m	
4.	Brickwork in superstructure	1	19.20	0.30	3.60	20.16 cu.m	Door and window openings, lintels, etc. to be deducted.

Ex. 4(b) Estimate by centre line methode the quantities of the following items of a two roomed building Fig 2.6.

(1) Earthwork in excavation in foundation
(2) Lime concrete in foundation
(3) 1st class brickwork in cement mortar 1:6 foundation and plinth
(4) 2.5 cm c.c. damp proof course, and
(5) 1st class brickwork in lime mortar in superstructure

Ans There are 2 junctions of the inter wall with the main wall,
Total centre length of wall:- 2 X c. to c. of long wall + 3 X c. to c. of short wall
= 2 X 10.60 + 3 X 6.30 = 40.10 m

Scanned by CamScanner

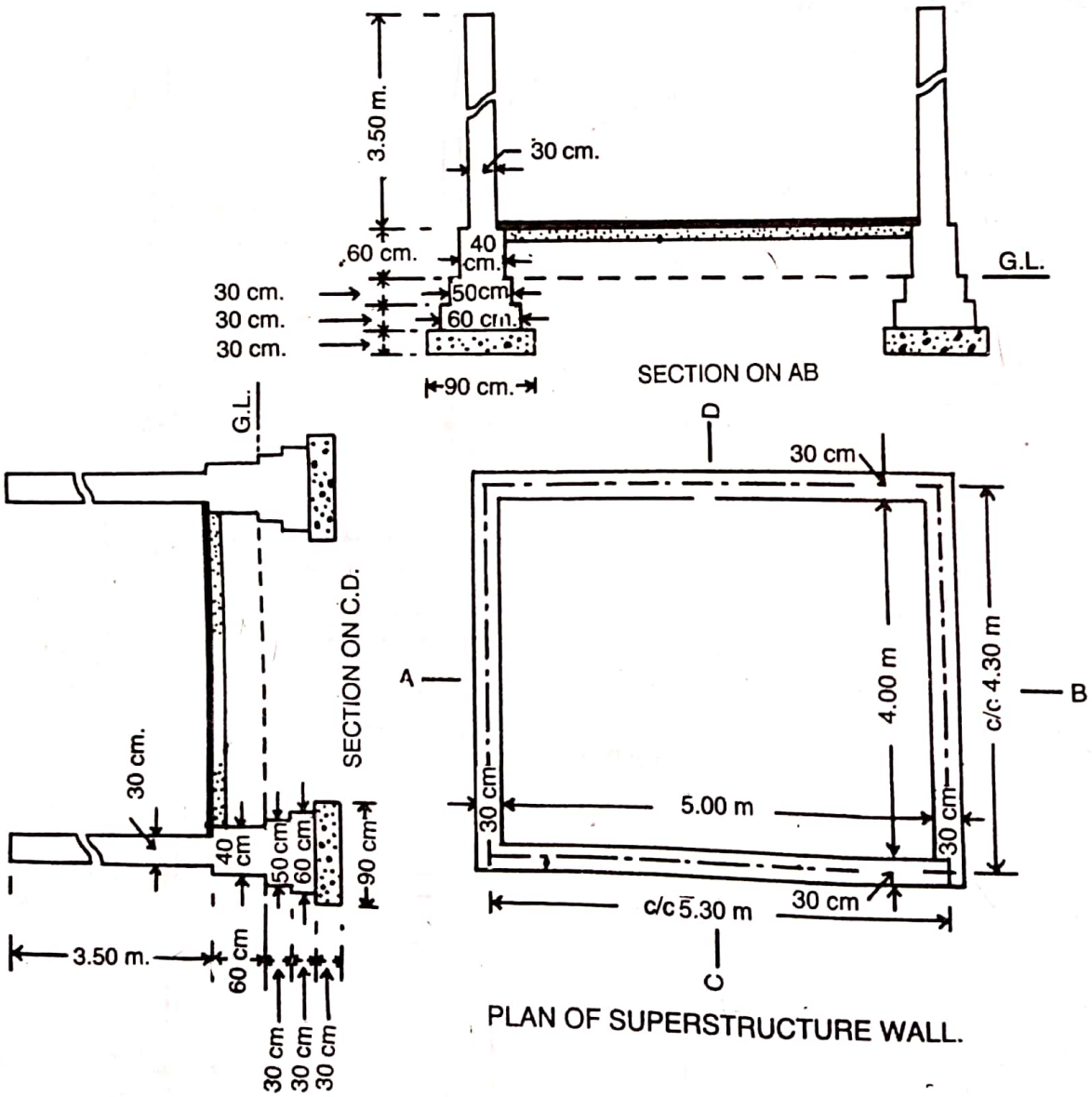

Fig. 2-3

Scanned by CamScanner

TWO ROOMED BUILDING

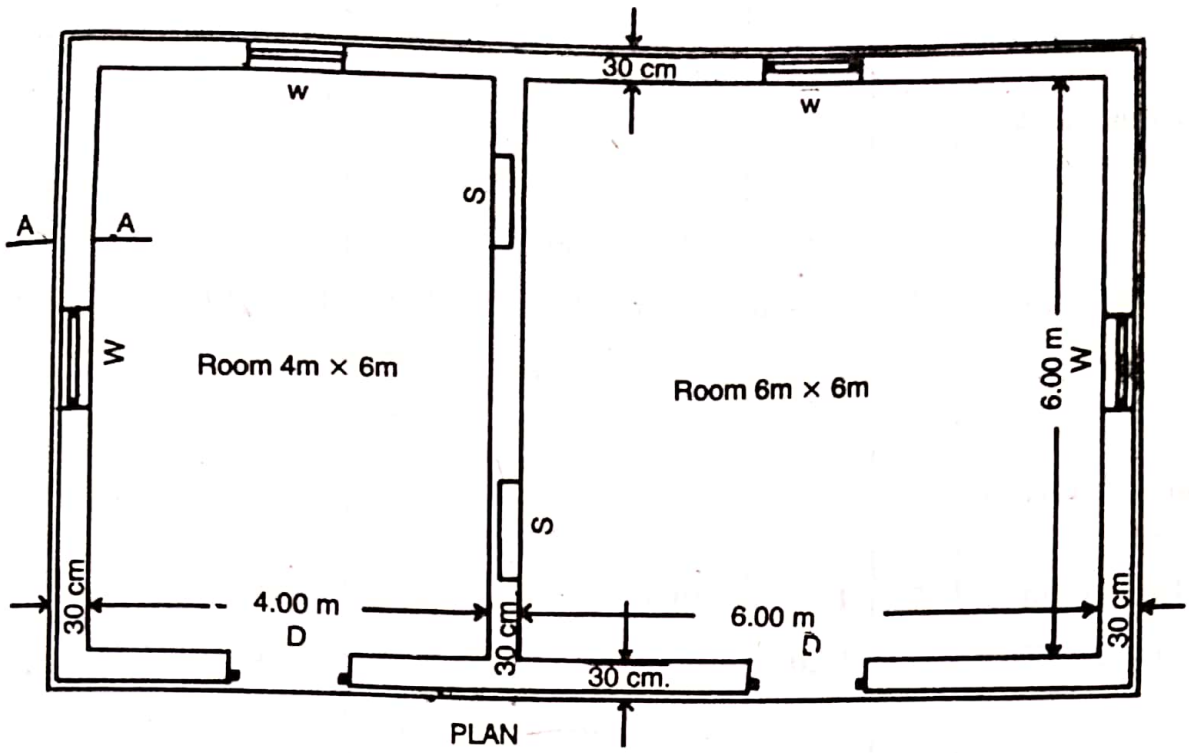

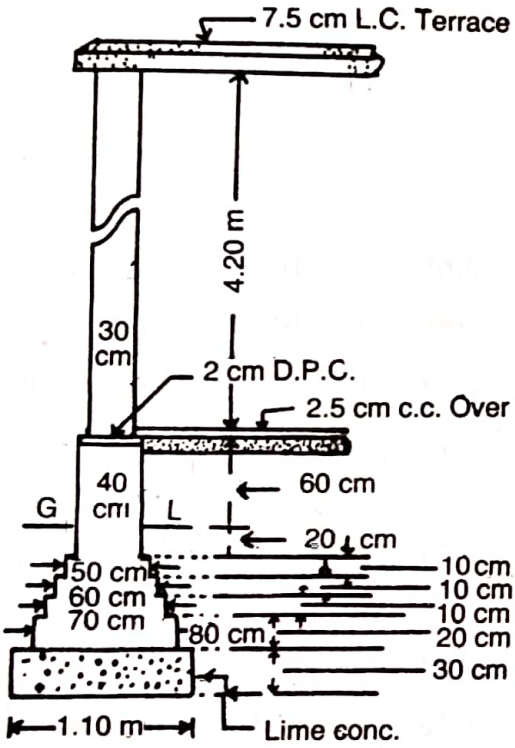

CROSS SECTION OF WALL ON AA.

All Walls are of same section
Lintels over Doors. Windows and
Shelves are 15 cm thick R.B.

Doors D-1.20 m × 2.10 m
Windows W-1.00 × 1.50 m
Shelves S-1.00 m × 1.50 m

Fig. 2-6

Scanned by CamScanner

Item No.	Particulars of item	No	Length in m	Breadth in m	Height in m	Quantity	Explanatory Notes
							Total centre length = 40.10 m
1.	Earthwork in excavation in foundation	1	39.00	1.10	1.0	42.90 cu.m	$L = 40.10 - 2 \times \frac{1.10}{2} = 39.00$ m
2.	Lime concrete in foundation	1	39.00	1.10	0.30	12.87 cu.m	L same as above
3.	1st class brickwork in 1:6 cement mortar in foundation and plinth —						
	1st footing	1	39.30	0.80	0.20	6.29 cu.m	$L = 40.10 - 2 \times \frac{0.80}{2} = 39.30$ m
	2nd footing	1	39.40	0.70	0.10	2.76	$L = 40.10 - 2 \times \frac{0.70}{2} = 39.40$ m
	3rd footing	1	39.50	0.60	0.10	2.37	$L = 40.10 - 2 \times \frac{0.60}{2} = 39.50$ m
	4th footing	1	39.60	0.50	0.10	1.98	$L = 40.10 - 2 \times \frac{0.50}{2} = 39.60$ m
	plinth wall above footing	1	39.70	0.40	0.80	12.70	$L = 40.10 - 2 \times \frac{0.40}{2} = 39.70$ m
					Total	26.10 cu.m.	
4.	Damp proof course 2.5cm c.c	1	39.70	0.40	—	15.88	$L = 40.10 - 2 \times \frac{0.40}{2} = 39.70$ m
	Deduct door sill	2	1.20	0.40	—	0.96	
					Net	14.92 cu.m	
5.	1st class brick-work in lime mortar in superstructure	1	39.80	0.30	4.20	50.15	$L = 40.10 - 2 \times \frac{0.30}{2} = 39.80$ m
	Deduct door, window, shelve openings and lintels	1	same as per		details in	4.40	Deduction to be made as usual
					Net	45.75 cu.m	

Ex. 5(b) Estimate by centre line method the quantities of the following items of a residential building, Fig 2.7 of

(1) Earthwork in excavation in foundation
(2) Lime concrete in foundation
(3) First class brickwork in 1:6 cement sand mortar in foundation and plinth
(4) Damp proof course and
(5) First class brickwork in lime mortar in superstructure.

Ans Total centre length of all 30 cm walls (same type) of main rooms
= Total centre length of walls of drawing and left side bed room + Total centre length of walls of bed rooms right side
= (2 × c. to c. length of long wall + 3 × c. to c. length of short wall) + (2 × c. to c. length of long wall + 2 × c. to c. length of short wall)
= (2 × 10.60 + 3 × 5.30) + (2 × 9.60 + 2 × 4.80)
= 37.10 + 28.80 = 65.90 m.

Number of junctions for these walls is 6 marked 'x' in the plan Fig 2.7., all these junctions are with main walls of 30 cm.

Total centre length of all 20 cm walls of front verandah, back verandah and bath room
= (c. to c. length of front wall + c. to c. length of side wall) + (c. to c. length of back verandah long wall including bath) + 2 × c. to c. length of cross walls of bath room
= (9.65 + 2.25) + (9.65 + 2 × 2.75) = 11.90 + 15.15 = 27.05 m.

Item No	Particulars of item	No	length in m	Breadth in m	Height in m	Quantity	Explanatory Notes
1.	Earthwork in excavation in foundation —						
	wall of main room (six junctions)	1	63.20	0.90	1.00	56.88	$L = 65.90 - 6 \times \frac{0.90}{2} = 63.20$ m
	walls of verandahs including bath (five and one junctions)	1	24.50	0.60	0.50	7.35	$L = 27.05 - 5 \times \frac{0.90}{2} - 1 \times \frac{0.60}{2} = 24.50$ m
					Total =	64.23 cu.m	

Scanned by CamScanner

RESIDENTIAL BUILDING

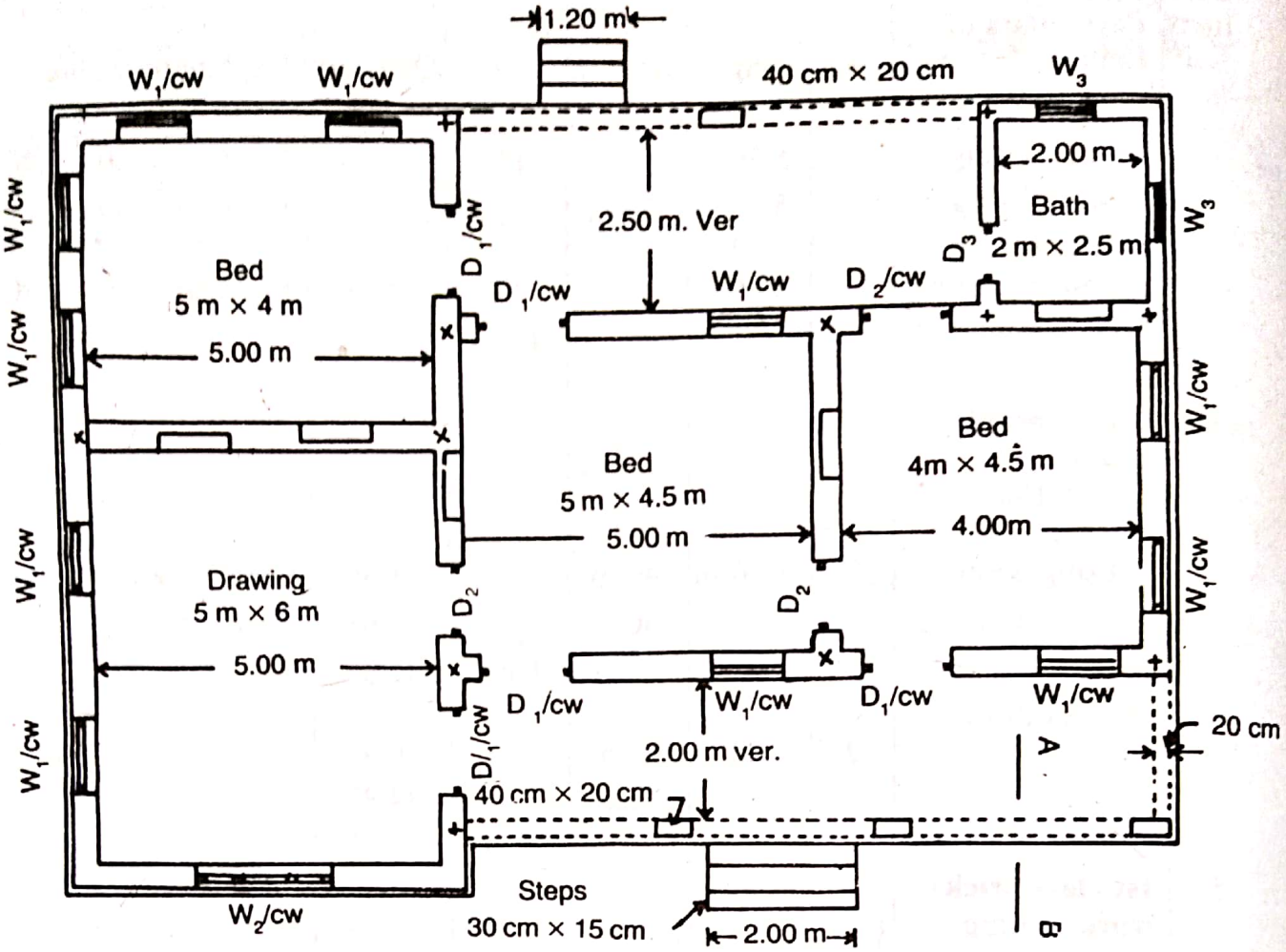

PLAN

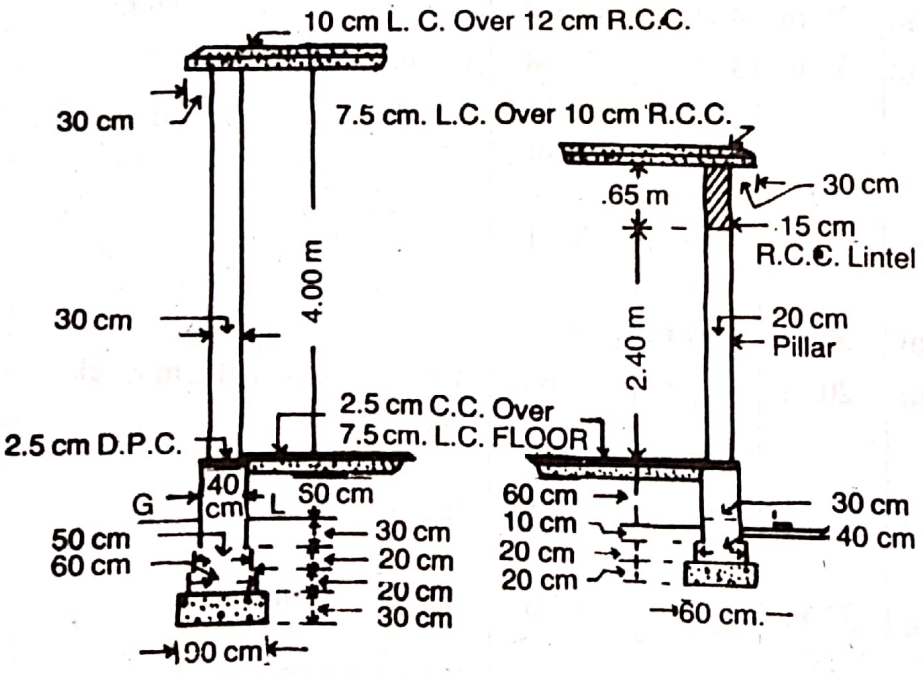

CROSS SECTION OF MAIN WALLS

CROSS SECTION AB OF VER.WALL

Doors:-
D_1 – 120 cm × 210 cm (1.20 m × 2.10 m)
D_2 – 100 cm × 200 cm (1.00 m × 2.00 m)
D_3 – 75 cm × 180 cm (.75 m × 1.80 m).

Windows:-
W_1 – 100 cm × 150 cm (1.00 m × 1.50 m)
W_2 – 200 cm × 150 cm (2.00 m × 1.50 m)
W_3 – 75 cm × 120 cm (.75 m × 1.20 m)
C.W. – 75 cm × 60 cm (.75 m × .60 m).

Shelves:-
S – 100 cm × 150 cm (1.00 m × 1.50 m)
Lintel Over Doors, Windows Etc.
15 cm R.B.

All walls of Drawing Rooms and Bed Rooms have same section

Bath Room walls have similar section.

***Note**—No beam has been shown in the plan.*

Fig. 2-7

Scanned by CamScanner

Particulars of item	No.	L	B	H	Q	Ex. note
2. Lime concrete in foundation						
walls of main room	1	63.20	0.90	0.30	17.06	Length same as earthwork excavation
walls of verandah and bath	1	25.50	0.60	0.20	2.06	$L = 27.05 - 5\times\frac{0.50}{2} - 1\times\frac{0.60}{2}$ $= 25.50$ m (minus half breadth per junction at the same level)
				Total =	20.12 cu.m	

3. 1st class brickwork in foundation and plinth in 1:6 cement mortar —

Walls of main rooms —						
1st footing	1	64.10	0.60	0.20	7.69	$L = 65.90 - 6\times\frac{0.60}{2} = 64.10$ m
2nd footing	1	64.40	0.50	0.20	6.44	$L = 65.90 - 6\times\frac{0.50}{2} = 64.40$ m
plinth wall above footing	1	64.70	0.40	0.90	23.29	$L = 65.90 - 6\times\frac{0.40}{2} = 64.70$ m
Walls of verandah and bath —						
footing	1	25.85	0.40	0.20	2.07	$L = 27.05 - 5\times\frac{0.40}{2} - 1\times\frac{0.40}{2}$ $= 25.85$ m
plinth wall above footing	1	25.90	0.30	0.70	5.44	$L = 27.05 - 5\times\frac{0.40}{2} - 1\times\frac{0.30}{2}$ $= 25.90$ m
				Total =	44.93 cu.m	

4. 2.5cm Damp proof course

Walls of main rooms	1	64.70	0.40	—	25.88
Verandah pillars	4	0.50	0.30	—	0.60
Bathrooms (total of 3 walls)	1	7.30	0.30	—	2.19
				Total =	28.67 sq.m

$L = (2.20 + 2\times0.15) + 2\times(2.75 - \frac{0.4}{2} + \frac{0.3}{2})$ $= 7.30$ m

Deduct door sills same as per detailing 3.91 Deduction of usual

Net Total = 24.76 sq.m

5. 1st class brick-work in superstructure in lime mortar —

walls of main rooms	1	65.00	0.30	1.00	78.00
walls of verandah and bath (as solid)	1	26.20	0.20	5.05	15.98
				Total =	93.98

$L = 65.90 - 6\times\frac{0.30}{2} = 65.00$ m

$L = 27.05 - 5\times\frac{0.50}{2} - 1\times\frac{0.20}{2}$ $= 26.20$ m

Deduct openings and lintels same as deduct. 27.40 Details deduction as usual.

Net Total = 66.58 cu.m

Arch calculations:

The quantities of masonry work in arch is calculated by multiplying the mean length of arch by breadth of walls and by the thickness of arch. In the case of culvert the quantity of arch masonry work is equal to the length of arch face to face × mean length of arch × thickness of arch.

Case.I Segmental Arch with span and angle given:- Arch of span S subtendening an angle Q at the centre

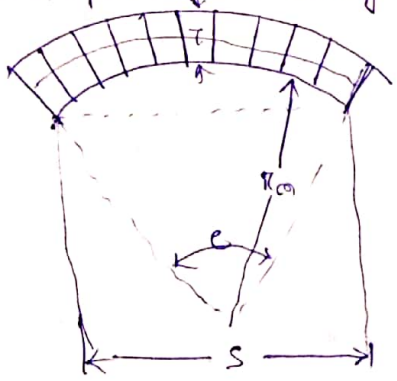

S = span, Q = angle at the centre, r = radius

r_m = mean radius

l_m = mean length of arch, t = thickness of arch,

b = breadth of wall

$\sin\frac{Q}{2} = \frac{S/2}{r}$

$\therefore r = \frac{S}{2}\times\frac{1}{\sin\frac{Q}{2}}$, $r_m = r + \frac{t}{2}$

$\frac{l_m}{2\pi r_m} = \frac{Q}{360}$, $\therefore l_m = 2\pi r_m \times \frac{Q}{360}$

l_m can be found

Quantity of arch masonry work Q = mean length of arch × breadth of wall × thickness of arch

$= l_m \times b \times t$

Scanned by CamScanner

ex.1 An arch of 2.50m span subtends an angle of 60° at the centre. The thickness of arch is 30cm and the breadth of wall is 40cm. Calculate the quantity of arch masonry work.

Ans Radius $r = \frac{s}{2} \times \frac{1}{\sin 40^\circ} = \frac{2.50}{2} \times \frac{1}{0.642} = 1.945$ m

Mean radius $r_m = r + \frac{t}{2} = 1.945 + \frac{0.30}{2} = 2.095$ m

Mean length of arch $l_m = 2\pi r_m \times \frac{\theta}{360} = 2 \times \frac{22}{7} \times 2.095 \times \frac{80}{360} = 2.93$ m

Quantity of arch masonry = l_m x breadth of wall x thickness of arch
= 2.93 x 0.40 x 0.30 = 0.352 cu.m.

Case II Segmental Arch of 60° Arches over doors and windows are usually segmental subtending an angle of 60° at the centre. 60° arch forms an equilateral on the span with radii

l_m = mean length of arch, r_m = mean radius

s = span r = radius

$r = s$ and $r_m = r + \frac{t}{2}$, $\frac{l_m}{2\pi r_m} = \frac{60^\circ}{360^\circ} = \frac{1}{6}$

$l_m = \frac{1}{6} \times 2\pi r_m = \frac{1}{3}\pi r_m$, l_m can be found

Quantity Q = l_m x breadth of wall x thickness of arch
= $l_m \times b \times t$

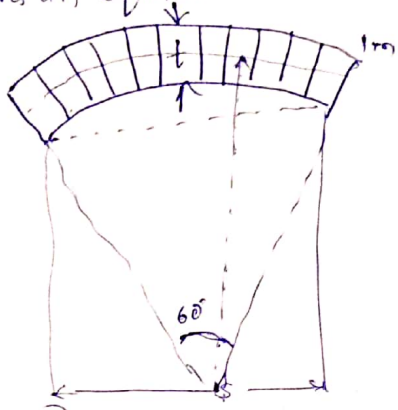

Fig 2.11

ex.2 Calculate the quantity of brickwork in a 60° arch over a door of 1.20m width. The arch is 20cm thick and the thickness of the wall is 30cm.

Ans $r = 1.20$m, $r_m = r + \frac{t}{2} = (1.20 + \frac{0.20}{2}) = 1.30$m

$l_m = \frac{1}{2}\pi r_m = \frac{1}{2} \times \frac{22}{7} \times 1.30 = 1.36$m

Breadth of wall $b = 0.30$m, Thickness of arch $t = 0.20$m

$\therefore Q = l_m \times b \times t = 1.36 \times 0.30 \times 0.20 = 0.082$ cu.m.

Arch masonry, lintels over openings are all deduction works

plastering and pointing ..

Plastering usually 12mm($\frac{1}{2}$") thick is calculated in sq.m. For walls the measurement are taken for the whole face of the wall for both sides as solid, and deductions for openings are made in the following manner —

(i) No deduction is made for ends of beams, posts, rafters, etc.

(ii) ~~Same Rule~~ For small opening up to 0.5 sqm (5 sq.ft) no deduction is made, and at the same time no additions are made for jambs, soffits and of sills of these openings

(iii) For openings exceeding 0.5 sq.m (5 sq.ft) but not exceeding 3 sq.m (30 sq.ft) deduction is made for one face only, and the other face is allowed for jambs, soffits and sills which are not taken into account separately.

(iv) For openings above 3 sqm (30 sq.ft) deduction is made for both faces of the opening. and the jambs, soffits and sills are taken into account and added.

As the outer jambs, etc. are much smaller than the inner ones, the deduction is usually made.

For the deduction for arch opening the same principle as for masonry work is followed.

plastering of ceiling usually of 12mm($\frac{1}{2}$") thick is computed in sq.m under a separate head as this work is done with richer mortar. For R.C.C. work

Scanned by CamScanner

usually no plastering is allowed but for fair finish a thin plaster of rich cement mortar may be allowed which should not be taken in the measurements separately. Then rich cement mortar plastering in R.C.C. work may also be taken under a separate item, specially in the ceiling inside room.

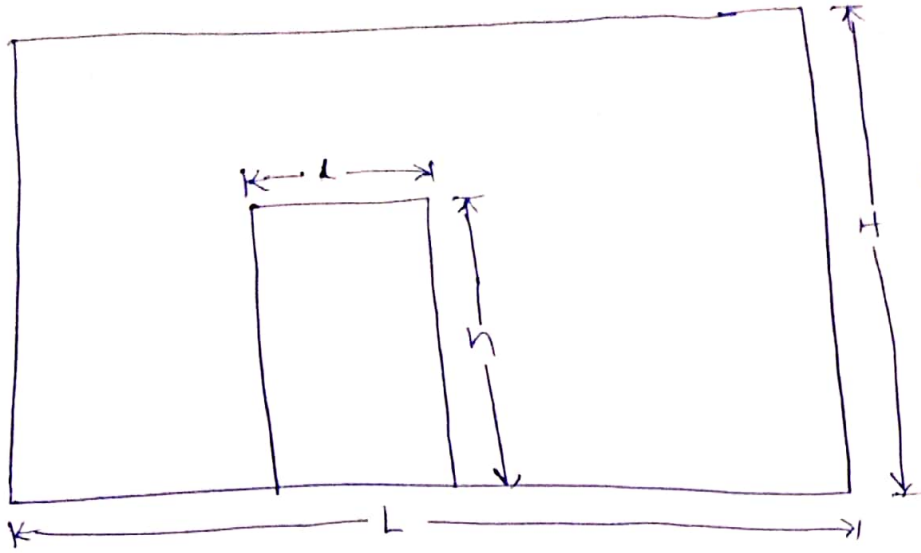

Inside plaster : L×H
Outside plaster = L×H − l×h

Pointing: Pointing in walls is calculated in sq.m for whole surface and deductions similar to plastering are made.

White-washing or Colour-washing or Distempering:
The quantities are computed in sqm and are usually same as for plastering. The inside is usually white washed or distempered and thus item will be same as for inside plaster. The outside is colour-washed and the quantities of the colour-washing will be same as for outside plaster. These item need not be calculated separately. but simply written as same as for inside plaster or outside plaster. Number of coats of white washing or colour-washing are taken as one job or work and the rates cover for the number of coats which should not be a multiplying factor. The number of coats should be mentioned in this item. Deductions are dealt in the same manner as for plastering. Other types of surface finishing may also be done and may be taken accordingly.

Painting: Painting or Varnishing of doors and windows are computed in sq.m. the dimensions should be taken for outer dimensions of the chowkhat i.e. outer dimensions of doors and windows. The area is measured flat. No separate measurement is taken for the chowkhat, the area is same as the area of wall opening. For iron bars, grills etc. the area of the clear opening inside the chowkhat is taken. For both faces of doors and windows, the simple area as measured above is multiplied by appropriate numbers as below.

(i) Panelled, framed and braced ledged and battened or ledged battened and braced → 2½ times one surface area, for both sides
(ii) Fully glazed or gauge → 1 times one surface area, for both sides
(iii) Partly panelled and partly glazed or gauged → 2 times one surface area, for both sides
(iv) Flush door → 2 times one surface area, for both sides
(v) Venetian → 3 times one surface area, for both sides
(vi) Iron bars, grills in windows → 1 times the area of clear opening in between chowkhat for over all.

This covers also for chowkhats on 3 faces. Painting is done in two or three coats

Scanned by CamScanner

is very small, the deduction

usually over a coat or priming. The rates covers for the numbers of coats under one item. The number of coats should mentioned

The concealed surface of the chowkhat which is in contact with the jamb of the wall is usually painted with two coats of coaltar or soliqnum and this item is computed separately.

For beams, rafters, purlins, posts, etc. of timber or iron, the area of actual exposed surface is taken for painting.

Corrugated surface is taken as flat and a percentage increase is allowed.

Example Prepare a detailed estimate of a single room building having a front verandah from the given plan, elevation and sectional drawing (Fig 3.4). General specifications are as follows

Foundation and plinth – first class brickwork in 1:6 cement and local sand mortar over lime concrete, 2cm DPC of 1:2 cement mortar mixed with standard water proofing material.

Superstructure – Walls shall be of first class brickwork in lime mortar. Inside and outside walls shall be 12mm plastered with 1:1:6 cement : lime : sand, ceiling shall be 12mm 1:3 cement plastered. Inside shall be white washed three coats and outside shall be colour washed one coat over two coats of white washing.

Door and windows – Doors and window chowkhats shall be of sal wood and shutters shall be 4cm panelled of deodar wood, and painted two coats over one coat of priming.

Soln Centre to centre length of walls –

Long wall C. to C. length = 4.20 + 0.30 = 4.50m
Short wall C. to C. length = 3.00 + 0.30 = 3.30m
Verandah front C. to C. length = 4.20 + 0.30 = 4.50m
Verandah side C. to C. length = 2.00 + 0.30 = 2.30m

Item No	Particulars and details of works	No	Length in m	Breadth in m	Height in m	Quantity	Explanatory Notes
1.	Earthwork in excavation in foundation – Room						
	Long walls	2	5.30	0.80	0.65	5.51	L = 4.50 + 0.80 = 5.30m
	short walls	2	2.50	0.80	0.65	2.60	L = 3.30 − 0.80 = 2.50m
	Verandah – pillars	5	0.70	0.70	0.65	0.96	
	plinth dwarf wall front (sum total length)	1	3.10	0.40	0.25	0.31	L = 4.50 − 2×0.70 = 3.10m
	plinth dwarf wall sides	2	1.55	0.40	0.25	0.31	L = 2.30 − 0.80/2 − 0.70/2 = 1.55m
	step	1	2.10	0.65	0.10	0.14	
					Total =	9.83 cu.m.	
2.	Earthwork in refilling in plinth –						
	Room	1	4.10	2.90	0.375	4.46	
	Verandah	1	4.50	2.10	0.375	3.54	L = 4.90 − 0.40 = 4.50m B = 2.35 − 0.20 − 0.05 = 2.10m
					Total =	8.00 cu.m	
	Deduct.						
	projectional central pillars	1	0.40	0.20	0.375	0.03	These deductions may be neglected being small
	projection side pillars	2	0.20	0.20	0.375	0.03	
					Total =	0.06	
				Net Total =		7.94 cu.m.	

Scanned by CamScanner

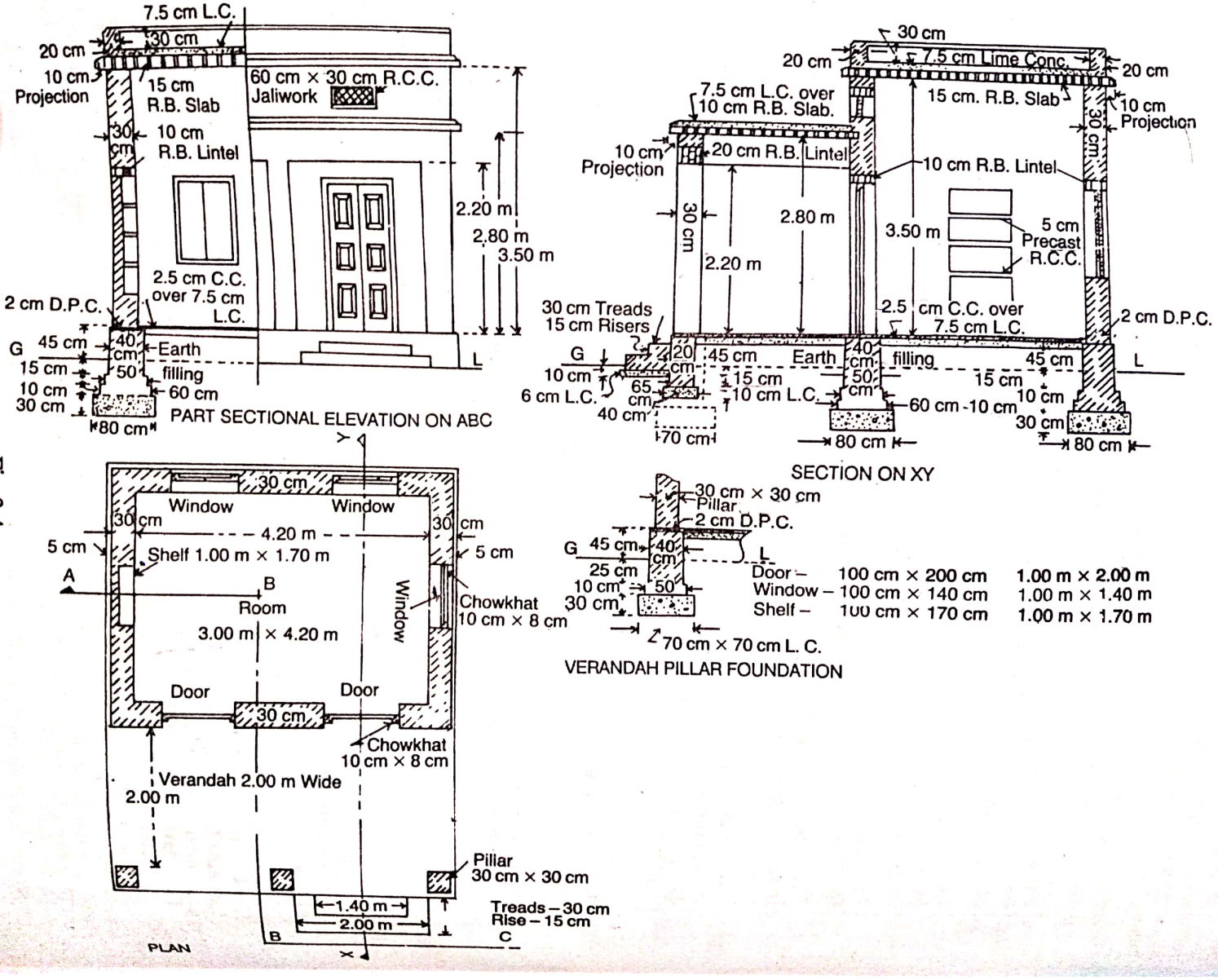

Fig. 3-4

Scanned by CamScanner

Item No.	Particulars of items and details of work	No.	Length in m	Breadth in m	Height in m	Quantity	Explanatory Note
3.	Lime concrete in foundation						
	Room –						
	Long walls	2	5.30	0.80	0.30	2.54	
	short walls	2	2.50	0.80	0.30	1.20	
	Verandah pillar	3	0.70	0.70	0.30	0.44	
	Dwarf wall front (sum total length)	1	3.70	0.40	0.10	0.15	L = 4.50 − 2×0.40 = 3.70 m
	Dwarf wall sides	2	1.85	0.40	0.10	0.15	L = 2.30 − 0.50/2 − 0.40/2 = 1.85 m
	step	1	2.10	0.65	0.06	0.08	
					Total =	4.56 cu.m.	
4	1st class brickwork in foundation and plinth in lime mortar –						
	Room –						
	Long walls						
	1st footing	2	5.10	0.60	0.10	0.61	L = 4.50 + 0.60 = 5.10 m
	2nd footing	2	5.00	0.50	0.10	0.50	L = 4.50 + 0.50 = 5.00 m
	plinth wall above footing	2	4.90	0.40	0.60	2.35	L = 4.50 + 0.40 = 4.90 m
	short walls						
	1st footing	2	2.70	0.60	0.10	0.32	L = 3.30 − 0.60 = 2.70 m
	2nd footing	2	2.80	0.50	0.10	0.28	L = 3.30 − 0.50 = 2.80 m
	plinth wall	2	2.90	0.40	0.60	1.39	L = 3.30 − 0.40 = 2.90 m
	Verandah.						
	Pillar footing	3	0.50	0.50	0.10	0.075	
	Pillar plinth	3	0.40	0.40	0.70	0.336	
	Dwarf wall front (sum total length)	1	3.70	0.20	0.60	0.44	L = 4.50 − 2×0.40 = 3.70 m
	Dwarf wall sides	2	1.90	0.20	0.60	0.46	L = 2.30 − 0.4 = 1.90 m
	step:						
	1st step	1	2.00	0.60	0.19	0.23	
	2nd step	1	1.40	0.30	0.15	0.06	
					Total =	7.05 cu.m	
5.	2cm D.P.C. of 1:2 cement mortar with water-proofing materials –						
	Long walls	2	4.90	0.40	–	3.92	length, breadth same as plinth wall
	short walls	2	2.90	0.40	–	2.32	
	Verandah –						
	pillars	3	0.40	0.40	–	0.48	
						6.72 sq.m	
	Deduct door sills	2	1.00	0.40	–	0.80	
					Total =	5.92 sq.m.	
6.	I-class brickwork in super-structure in lime mortar						
	Room –						
	long walls	2	4.80	0.30	3.50	10.08	L = 4.50 + 0.30 = 4.80 m
	short walls	2	3.00	0.30	3.50	6.30	L = 3.30 − 0.30 = 3.00 m
	Verandah –						
	pillars	3	0.30	0.30	2.20	0.59	
	front above lintel	1	4.80	0.30	0.40	0.57	
	sides above lintel	2	2.00	0.30	0.40	0.48	
	parapet long walls	2	4.80	0.20	0.375	0.72	
	parapet short walls	2	3.20	0.20	0.375	0.48	
					Total =	19.22	
	Deduct:						
	Door openings	2	1.00	0.30	2.00	1.20	
	window openings	3	1.00	0.30	1.40	1.26	
	shelf	1	1.00	0.20	1.70	0.34	

Scanned by CamScanner

No.	Particulars of item and details of work	No.	Length in m	Breadth in m	Height in m	Quantity	Explanatory Notes
	Ventilators	2	0.60	0.30	0.30	0.11	
	Lintel over doors	2	1.20	0.30	0.10	0.07(a)	10cm bearings
	Lintel over windows	3	1.20	0.30	0.10	0.11(c)	
	Lintel over shelves	1	1.20	0.30	0.10	0.0416)	Total of (c)s = 0.24 cum
	Lintel over ventilator	1	0.80	0.30	0.10	0.02(c)	
				Total of deductions		0.315 cum	
				Net total	=	16.07 cu.m	
7.	Reinforced Brickwork in 1:3 cement mortar excluding steel and its bending but including centering and shuttering and binding steel						
	Roof of room	1	5.00	3.80	0.15	2.850	
	Roof of verandah	1	5.00	2.55	0.10	1.275	15cm bearing
	Lintel verandah front	1	4.80	0.30	0.20	0.288	out to out
	Lintel verandah sides	2	2.15	0.30	0.20	0.258	15cm bearing
	Lintel over doors, windows etc		same as for items marked (a) in item (c)			0.240	
					Total	4.911 cu.m.	
8.	7.5cm lime concrete in roof terracing complete with surface finishing —						
	Roof of room	1	4.40	3.20	-	14.08	
	Roof of verandah	1	5.00	2.40	-	12.00	
					Total =	26.08 cu.m	
9.	Salwood work in chowkhat -						
	Doors (including 4cm inserts into floor)	2	5.08	0.10	0.08	0.081	{2 vert. — 2.04m each 1 Hor. — 1.00m each
	windows	3	4.80	0.10	0.08	0.115	{2 vert — 1.40 m each 2 Hor. — 1.00m each
					Total =	0.196 cu.m	
10.	4cm thick Panelled shutters of Deodar wood						
	Doors	2	0.87	1.935	-	3.367	15cm rebate
	windows	3	0.87	1.27	-	3.315	
					Total	6.682 sq.m.	
11.	Iron fittings including screws and hanging for doors and windows	same as for item (10)				6.68 sq.m	
12.	Precast R.C.C. slab shelve complete work including steel reinforcement and formwork	3	1.08	0.20	0.05	0.032 cu.m	4cm bearing.
13.	R.C.C. jaliwork 4cm thick in ventilators complete work including steel reinforcement and formwork	2	0.60	0.30	-	0.365 sq.m	
14.	Mild steel in Reinforcement bars including bending in R.B. work (at 7.1. of item 7)		1.91 X 7 / 1cm X 78.5 = 2.698 q				Density of mild steel = 78.5 q/cu.m
	Hold fasts in doors and windows	24	@1kg each = 24 = 0.24 q				6 nos in each door and 4 nos. in each window (Hold fasts may be taken under separate item)
					Total	2.938 q	

Scanned by CamScanner

Item no.	Particulars of item and Detail of work	No.	Length m	Breadth m	Height m	Quantity	Explanatory Notes
15.	2.5cm c.c. 1:2:4 floor over and including 7.5cm) lime concrete						
	Room	1	4.20	3.00	–	12.60	L = out to out − 2 dwarf walls = (4.2 + 2×0.30 + 2×0.05) − (2×0.20) = 4.50m
	Verandah	1	4.50	2.15	–	9.68	B = (2.0 + 0.30 + 0.05) − 0.20 = 2.15m
					Total =	22.28	
	Deduct - central pillars	1	0.30	0.15	–	0.045	
	side pillars	2	0.15	0.15	–	0.045	
					Total =	0.090	
				Net Total =		22.19 sq.m	
16.	2.5cm c.c. 1:2:4 floor (without lime concrete) –						
	Door sills	2	1.00	0.30	–	0.60	
	sills of verandah openings – Front in between pillars	1	3.90	0.20	–	0.78	L = 4.80 − 3×0.30 = 3.90 m
	sides	2	2.00	0.20	–	0.80	
					Total =	2.18 sq.ml	
17.	12mm plastering in ceiling with 1:3 cement and coarse sand mortar –						
	Room	1	4.20	3.00	–	12.60	
	Verandah	1	4.20	2.00	–	8.40	
					Total =	21.00 sq.mt.	
18.	12mm Plastering in walls with 1:1:6 cement lime and local sand mortar						
	Inside –						
	Room						
	long walls	2	4.20	–	3.50	24.90	
	short walls	2	3.00	–	3.50	21.00	
	Jambs, sill and soffit of shelf	1	5.40	0.20	–	1.08	L = 1.00×2 + 1.70×2 = 5.40m
	Verandah –						
	Wall						
	Pillars inner face	1	4.20	–	2.80	11.76	
	verandah above pillars (inner face) front	7	0.30	–	2.20	4.62	3 faces of central pillars and 2 faces of each end pillars
	– DO – sides	1	4.20	–	0.60	2.52	
	soffits of verandah lintels front	2	2.00	–	0.60	2.40	
	soffits of verandah lintel sides ~~front~~	1	3.90	0.30	–	1.17	L = 4.80 − 3×0.30 = 3.90m
	vertical faces of inner wall below lintel	2	~~3.90~~ 2.00	0.30	–	1.20	
		2	–	0.30	2.20	1.32	
			Total			76.47	
	Deduct door openings	2	1.00	–	2.00	4.00	one surface to each
				Net Total =		72.47 sq.ml	Total of inside plastering
	Outside						
	Room –						
	Backwall	1	4.80	–	3.50	16.80	
	side wall	2	3.60	–	3.50	25.20	
	plinth including 10cm below G.L. and 5cm offset back	1	4.90	–	0.60	2.94	Ht = 0.45 + 0.05 + 0.10 = 0.60m
	– DO – sides	2	3.65	–	0.60	4.38	
	Front wall above verandah roof	1	4.80	–	0.525	2.52	Ht = 3.50 − 2.975 = 0.525m
	Roof projection front and backs	2	5.00	–	0.25	2.50	Ht. = 0.15 + 0.10 = 0.25m
	– DO – sides	2	3.60	–	0.25	1.80	
	verandah pillars outer faces	5	0.30	–	2.20	3.30	one face of central pillars and two faces each of end pillars.
	Verandah above pillars (outer face) front	1	4.80	–	0.60	59.44	
	– DO – sides	2	2.30	–	0.60	2.76	

Scanned by CamScanner

Item No.	Particulars of item and details of work	No.	Length in m	Breadth in m	Height in m	Quantity	Explanatory Notes
	Verandah plinth						
	wall front	1	4.90	—	0.55	2.70	step to be deducted
	— Do — sides	2	2.35	—	0.55	2.59	Total centre length = 2×4.60 + 2×3.40 = 16.00 m
	Parapet walls (all four walls)	1	16.00	-	0.875	14.00	Ht. = 0.30 + 0.20 + 0.375 = 0.875 m
					Total:-	24.37	
	Deduct.						
	window, openings	3	1.00	-	1.40	4.20	one face of each
	ventilators	—	—	—	—	—	no deductions
	step	1	2.00	-	0.55	1.10	
					Total	5.30	
				Net Total =		79.07 sq.m	Total of outside plastering
	Grand total of inside and outside plastering					= 72.47 + 79.07	= 151.54 sq.m
19.	20mm cement plaster 1:3 in steps finished with neat cement —						
	1st step						
	Tread	1	2.60	0.30	—	0.78	
	Rise	1	3.20	—	0.15	0.48	
	2nd step -						
	Tread	1	1.40	0.30	—	0.42	
	Rise	1	2.00	-	0.15	0.30	
	plinth wall	1	1.40	—	0.15	0.21	
		2	0.30	—	0.30	0.18	
					Total:-	2.37 sq.m	
20.	White washing 3 coats.						
	inside wall	same as inside plaster in item (18)				-	72.47
	ceiling	same as ceiling plaster in item (17)				-	21.00
					Total:-	93.47 sq.m	
21.	Colour washing one coats over two coats of white washing	same as out side plaster in item (18)					79.07
	Deduction portion below G.L.	1	19.80	-	0.10	1.98	L = outer perimeter minus step = (4.90×2 + 6.00×2) - 2.00 = 19.80 m
					Total:-	77.09 sq.m	
22.	painting of doors and window two coats over one coats of priming —						
	Doors	2×2½×1.0		-	2.00	9.00	1½ ton one face
	windows	3×2½×1.00		—	1.40	9.45	1½ ton one face
					Total:-	18.45 sq.m	
23.	Coal tarring two coats on back of chowkhats						
	Doors	2	5.08	0.10	-	1.02	Length same as chowkhats in item 9
	windows	3	4.80	0.10	-	1.44	
						2.46 sq.m	

Scanned by CamScanner

Centreline method single room building with front verandah.

Estimate the following items
(a) Earthwork in excavation
(b) Lime concrete in foundation
(c) First class brickwork in foundation and plinth
(d) Damp proof course
(e) First class brickwork in superstructure

Ans Total length of centre lines of walls of room = $4.50 \times 2 + 3.30 \times 2 = 15.60$ m
Total length of centre lines of walls of verandah = $4.5 + 2.30 \times 2 = 9.10$ m
Total length of centre lines of walls of parapet = $4.60 \times 2 + 3.40 \times 2 = 16.00$ m

Item No	Particulars of item and details of works	No	Length in m	Breadth in m	Height in m	Quantity	Explanatory note
1.	Earthwork in excavation in foundation —						
	Rooms	1	15.60	0.80	0.65	8.11	No junctions
	verandah pillars	3	0.70	0.70	0.65	0.96	
	plinth dwarf wall	1	6.20	0.40	0.25	0.62	L = 9.10 − 3 pillar − ½ × 2 junction with main wall = 9.10 − 3×0.70 − ½ × 2×0.8 = 6.20
	step	1	2.10	0.65	0.10	0.14	
					Total =	9.83 cu.m.	
2.	Lime concrete in foundation						
	Room	1	15.60	0.80	0.30	3.74	
	verandah pillars	3	0.70	0.70	0.30	0.44	L = 9.10 − 3×0.40 − ½ × 2×0.40 = 7.50 m
	plinth dwarf wall	1	7.50	0.40	0.10	0.30	
	step	1	2.10	0.65	0.06	0.08	
					Total =	4.56 cu.m	
3.	I-class brick in foundation and plinth —						
	Room						
	1st footing	1	15.60	0.60	0.10	0.93	
	2nd footing	1	15.60	0.50	0.10	0.78	
	plinth wall	1	15.60	0.40	0.60	3.74	
	verandah pillars						
	1st footing	3	0.50	0.50	0.10	0.075	
	plinth wall	3	0.40	0.40	0.70	0.335	
	verandah dwarf wall	1	7.50	0.20	0.60	0.90	
	step — 1st step	1	2.00	0.60	0.19	0.23	
	2nd step	1	1.40	0.30	0.15	0.06	
					Total =	7.05 cu.m	
4.	2cm D.P.C.						
	Room	1	15.60	0.40	—	6.24	
	Verandah pillars	3	0.40	0.40	—	0.48	
					Total =	6.72	
	Deduction door sills	2	1.00	0.4	—	0.80	
					Total =	5.92 sq.m	
5.	I-class brickwork in superstructure in lime mortar —						
	Room	1	15.60	0.30	3.50	16.38	
	verandah (as solid)	1	8.80	0.20	2.80	7.39	L = 9.10 − ½ × 0.30 = 8.80 m
	parapet	1	16.00	0.20	0.375	1.20	
					Total =	24.97 cu.m	
	Deduct —						
	Verandah opening sides	1	3.90	0.20	2.20	2.57	L = 4.80 − 3×0.30 = 3.90 m
	verandah opening front	2	2.00	0.30	2.20	2.64	
	Verandah lintel front	1	4.20	0.30	0.20	0.29	
	verandah lintel sides	2	2.15	0.30	0.20	0.25	
	Deduction of door, window etc		same as page			5.15	
					Total =	8.90 cu.m	
					Net Total =	16.07 cu.m.	

Scanned by CamScanner

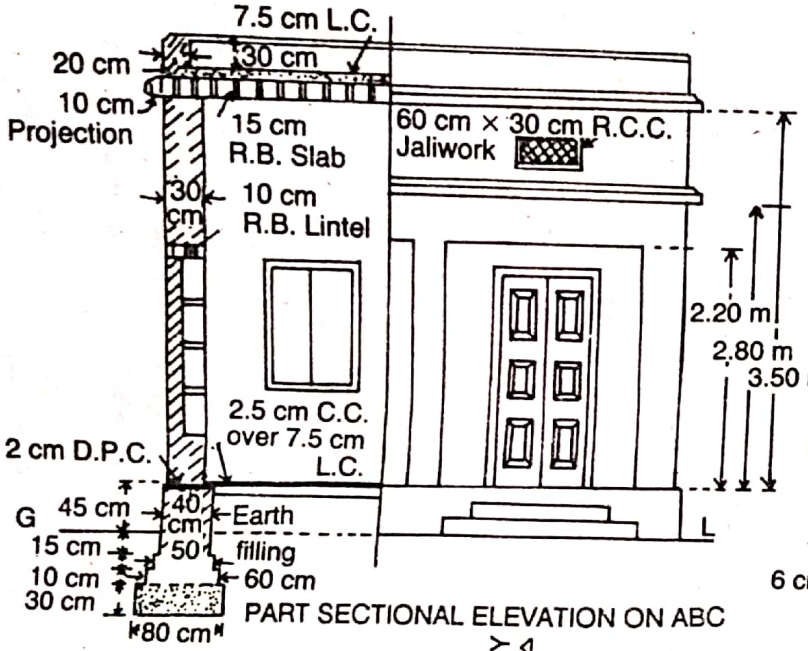

PART SECTIONAL ELEVATION ON ABC

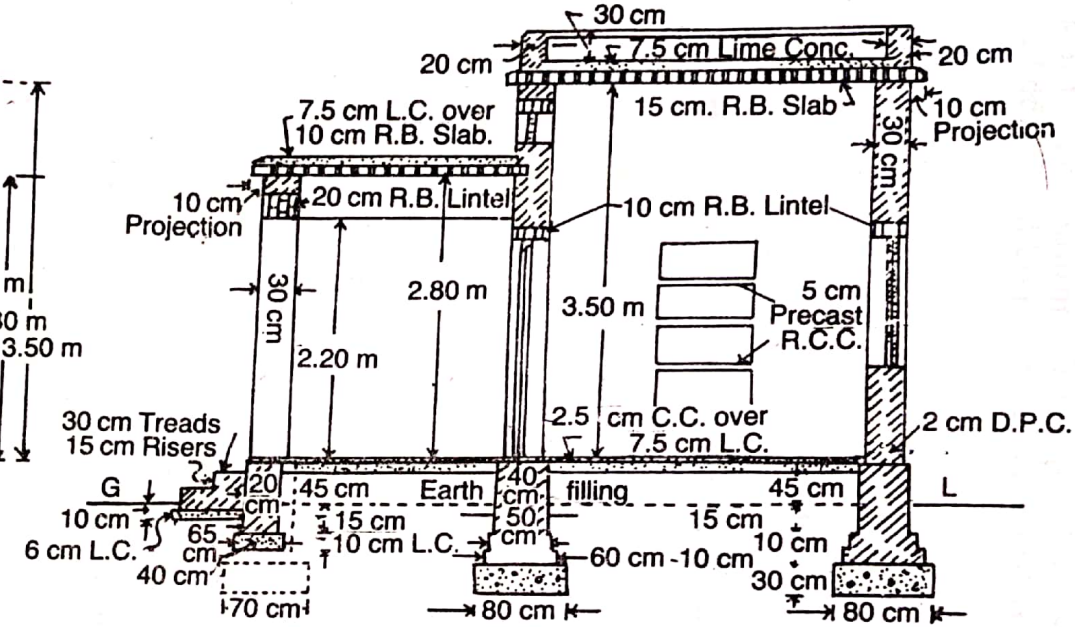

SECTION ON XY

Fig. 3-4

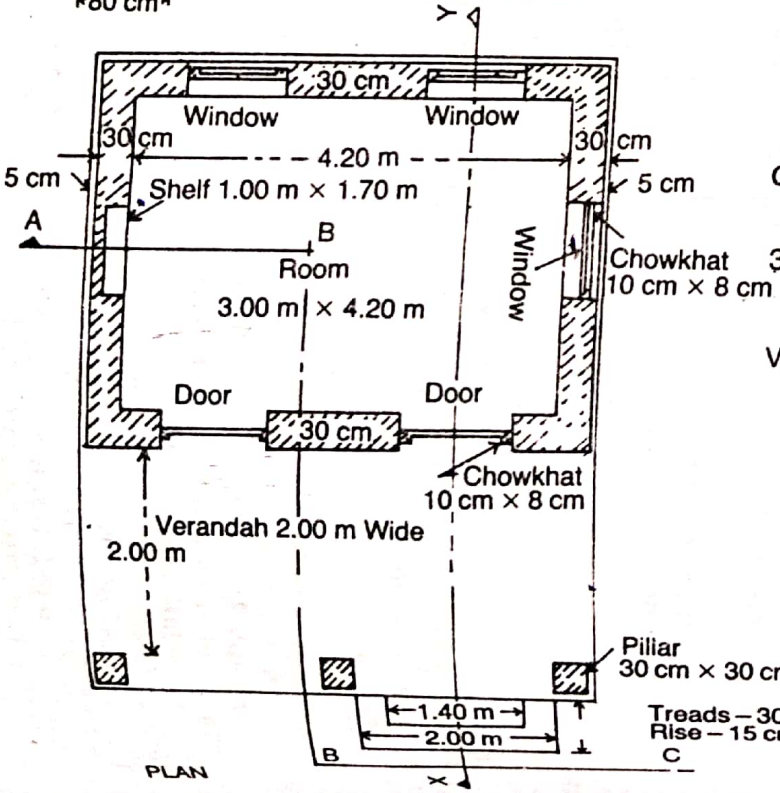

PLAN

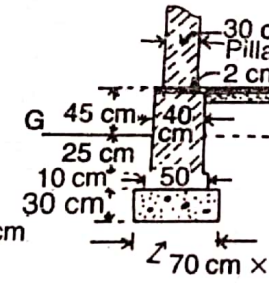

VERANDAH PILLAR FOUNDATION

Door –	100 cm × 200 cm	1.00 m × 2.00 m
Window –	100 cm × 140 cm	1.00 m × 1.40 m
Shelf –	100 cm × 170 cm	1.00 m × 1.70 m

Scanned by CamScanner

TWO-ROOM BUILDING WITH FRONT VERANDAH

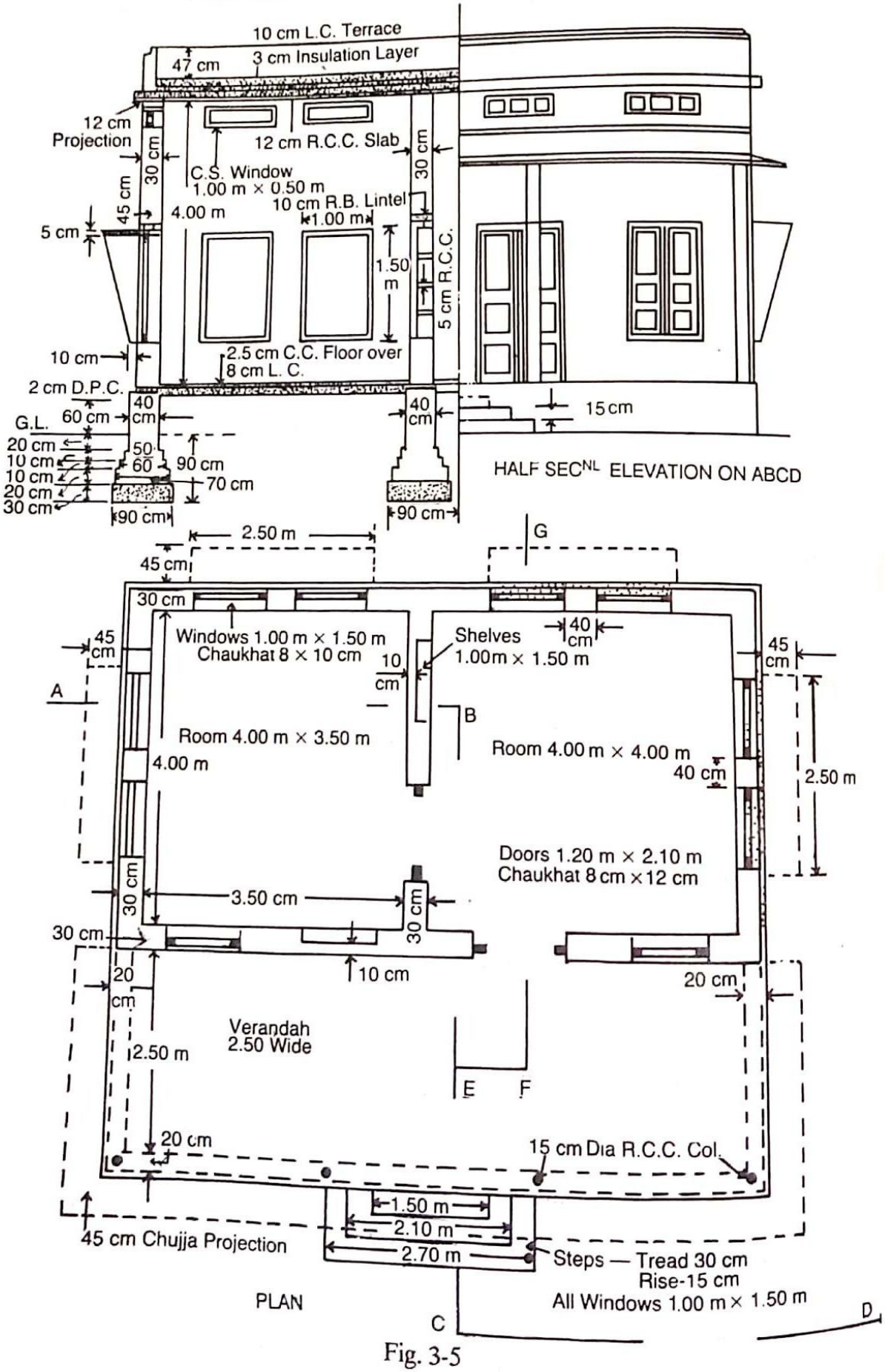

Fig. 3-5

Scanned by CamScanner

CROSS-SECTION OF TWO-ROOMED BUILDING

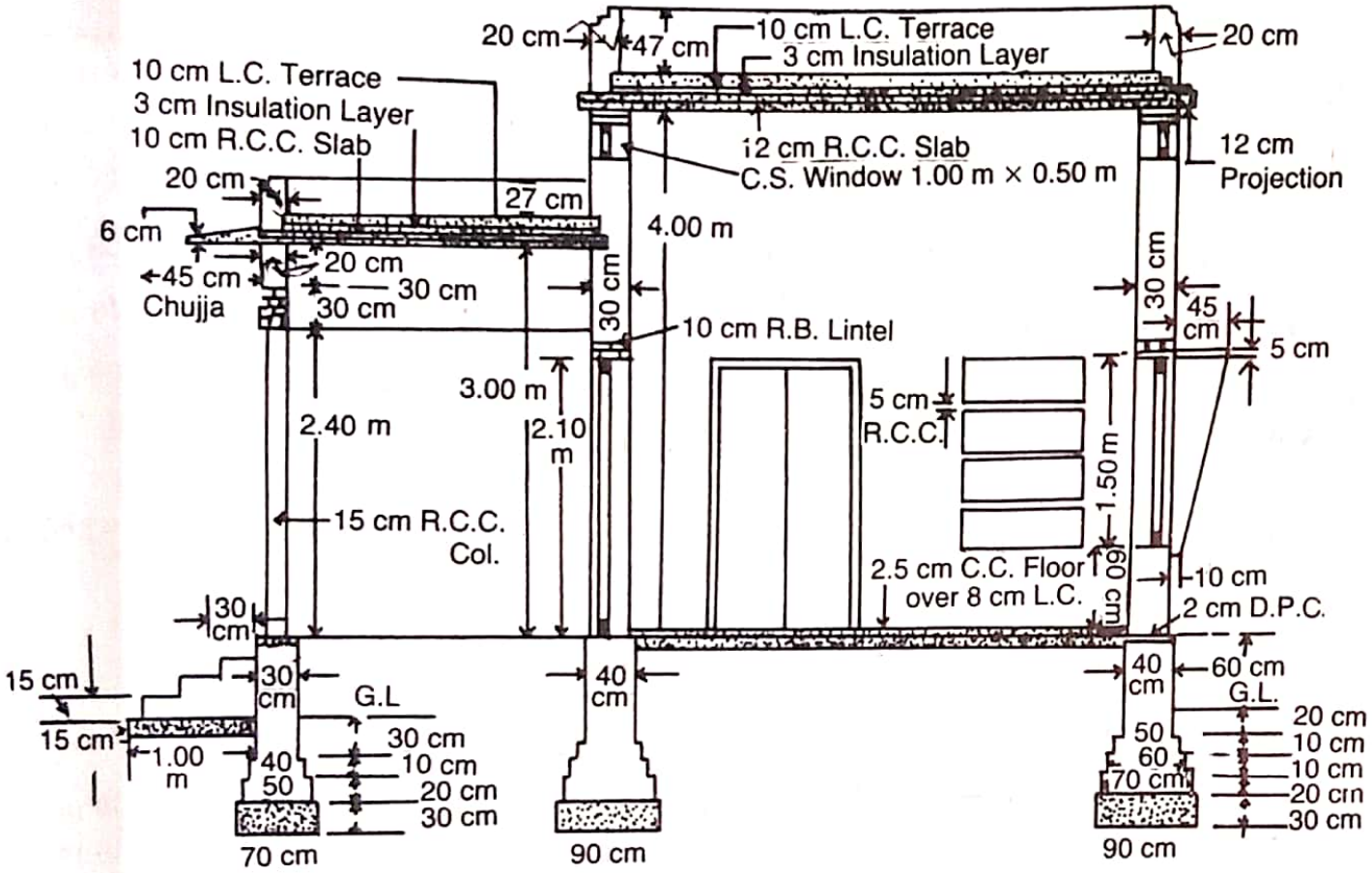

SEC^{NL} ELEVATION ON CEFG

Fig. 3-6

Scanned by CamScanner

Ex 5 Prepare a detailed estimate of a two roomed building with front verandah from the given drawings - plan, elevation, etc (Fig 3.5 and 3.6). Calculate also the plinth Area Rate.
The General Specifications are as follows

Foundation and plinth - 1st class brickwork in 1:6 cement mortar over lime concrete

Damp proof course (D.P.C) - 2cm thick cement mortar 1:2 with 1.00 kg of compound per bag of cement

Superstructure - 1st class brickwork in lime mortar. All lintel shall be R.B.

Roof - Lime concrete terracing over R.C.C. slab with an insulation layer of sand and clays in between.

Flooring - 2.5cm thick C.C. 1:2:4 over 8cm thick lime concrete, over well rammed earth, surface neat cement finished. Sills of doors and verandah openings shall have only 2.5cm C.C. floor.

plastering and finishing - Inside and outside walls 12mm thick plastered with 1:1:6 cement : lime : sand mortar. steps 20mm thick cement plastered 1:3 and neat cement finished. R.C.C. work in sun-shades and chhajjas should be fair and smooth finished without any extra payment. Inside white washed 3 coats and outside colour washed 2 coats over 1 coat of white washing.

Doors and windows - chowkhat (frame) shall be of well seasoned sal wood. shutters shall be 4cm thick panelled of Indian teak wood C.S window shutters shall be 4cm thick glazed. Door and windows shall be painted 2 coats over 1 coat of priming. Back of chowkhat shall be painted with 2 coats of solignum.

Miscellaneous item - Windows shall be provided with 16mm dia mild steel bars. Necessary iron hold fasts shall be provided in doors and windows. 4 nos. round water spouts of 10cm dia. C.I. pipe 1m long each shall be provided

Centre to centre lengths

Room Long walls = $3.50 + 4.00 + 0.30 + (2 \times \frac{0.30}{2}) = 8.10$ m combined total length

Room short walls = $4.00 + (2 \times \frac{0.30}{2}) = 4.30$ m

Verandah front - Extreme outer length at plinth - $(2 \times \frac{0.30}{2})$

$= \{3.50 + 4.00 + (3 \times 0.30) + (2 \times 0.05)\} e - 0.30 = 8.20$ m

Verandah sides = $2.50 + \frac{0.30}{2} + \frac{0.20}{2} = 2.75$ m.

Item No.	Particulars of item and details of works	No.	Length in m	Breadth in m	Height in m	Quantity	Explantory Notes
1.	Earthwork in excavation in foundation —						
	Room						
	Long walls	2	9.00	0.9	0.9	14.58	L = 8.10 + 0.90 = 9.00 mt.
	short walls	3	3.40	0.9	0.9	8.26	L = 4.30 - 0.90 = 3.40 mt
	Verandah front	1	8.90	0.7	0.9	5.61	L = 8.20 + 0.70 = 8.90 mt.
	Verandah sides	2	1.95	0.7	0.9	2.46	L = $2.75 - \frac{0.9}{2} - \frac{0.7}{2} = 1.95$ m
	step	1	2.90	1.00	0.15	0.44	L = 2.70 + (2 × 0.10) = 2.90 m
					Total =	31.35 Cu.mt	
2.	Earthwork in filling in plinth -						
	Room (i)	1	3.90	3.40	0.54	7.16	L = 4.0 - 0.10 = 3.90 m B = 3.50 - 0.10 = 3.40 m H = 60 + 2 - 8 = 54 cm = 0.54 m
	Room (ii)	1	3.90	3.90	0.54	8.22	L = 8.20 - 0.30 = 7.90 m
	Verandah	1	7.90	2.40	0.54	10.23	B = $2.75 - \frac{0.40}{2} - \frac{0.30}{2} = 2.40$ m
					Total =	25.61 cu.m	
3.	Lime concrete in foundation						
	Rooms —						
	Long walls	2	9.0	0.9	0.3	4.86	may be taken 1/3 of excavation
	short walls	3	3.4	0.9	0.3	3.75	

Scanned by CamScanner

Estimate of a 2 room building with front verandah

Ex: Prepare a detailed estimate of a two roomed building with front verandah from the given drawings - plan, elevation, etc. (Fig 3.5 and 3.6). Calculate also the plinth Area Rate.

The General Specifications are as follows

Foundation and plinth – 1st class brickwork in 1:6 cement mortar over lime concrete

Damp proof course (D.P.C) - 2cm thick cement mortar 1:2 with 1.00 kg of compound per bag of cement

Superstructure - 1st class brickwork in lime mortar. All lintel shall be R.B.

Roof - Lime concrete terracing over R.C.C. slab with an insulation layer of sand and clays in between.

Flooring – 2.5cm thick C.C. 1:2:4 over 8cm thick lime concrete, over well rammed earth, surface neat cement finished. Sills of doors and verandah openings shall have only 2.5cm C.C. floor.

plastering and finishing – Inside and outside walls 12mm thick plastered with 1:1:6 cement : lime : sand mortar. steps 20mm thick cement plastered 1:3 and neat cement finished. R.C.C. work in sun-shades and chhajjas should be fair and smooth finished without any extra payment. Inside white washed 3 coats and outside colour washed 2 coats over 1 coat of white washing.

Doors and windows: chowkhat (frame) shall be of well seasoned sal wood. shutters shall be 4cm thick panelled of Indian teak wood C.S. window shutters shall be 4cm thick glazed. Door and windows shall be painted 2 coats over 1 coat of priming. Back of chowkhat shall be painted with 2 coats of solignum.

Miscellaneous item – Windows shall be provided with 16mm dia mild steel bars. Necessary iron hold fasts shall be provided in doors and windows. 4 nos. rain water spouts of 10cm dia. C.I. pipe 1m long each shall be provided

Centre to centre lengths

Room Long walls = $3.50 + 4.00 + 0.30 + (2 \times \frac{0.30}{2}) = 8.10$ m combined total length

Room short walls = $4.00 + (2 \times \frac{0.30}{2}) = 4.30$ m

Verandah front – Extreme outer length at plinth – $(2 \times \frac{0.30}{2})$

$= \{3.50 + 4.00 + (3 \times 0.30) + (2 \times 0.05)\} - 0.30 = 8.20$ m

Verandah sides = $2.50 + \frac{0.30}{2} + \frac{0.20}{2} = 2.75$ m.

Item No.	Particulars of item and details of works	No.	Length in m	Breadth in m	Height in m	Quantity	Explantory Notes
1.	Earthwork in excavation in foundation —						
	Room						
	Long walls	2	9.00	0.9	0.9	14.58	L = 8.10 + 0.90 = 9.00 mt.
	short walls	3	3.40	0.9	0.9	8.26	L = 4.30 - 0.90 = 3.40 mt
	Verandah front	1	8.90	0.7	0.9	5.61	L = 8.20 + 0.70 = 8.90 mt.
	Verandah sides	2	1.95	0.7	0.9	2.46	L = $2.75 - \frac{0.9}{2} - \frac{0.7}{2}$ = 1.95 m
	step	1	2.90	1.00	0.15	0.44	L = 2.70 + (2 × 0.10) = 2.90 m
					Total =	31.35 Cu.mt	
2.	Earthwork in filling in plinth –						
	Room (i)	1	3.90	3.40	0.54	7.16	L = 4.0 - 0.10 = 3.90 m B = 3.50 - 0.10 = 3.40 m H = 60 + 2.8 = 54 cm = 0.54 m
	Room (ii)	1	3.90	3.90	0.54	8.22	L = 8.20 - 0.30 = 7.90 m
	Verandah	1	7.90	2.40	0.54	10.23	B = $2.75 - \frac{0.40}{2} - \frac{0.30}{2}$ = 2.40 m
					Total =	25.61 cu.m	
3.	Lime concrete in foundation						
	Rooms —						
	Long walls	2	9.0	0.9	0.3	4.86	may be taken 1/3 of excavation
	short walls	3	3.4	0.9	0.3	3.75	

Scanned by CamScanner

Item No.	Particulars of item of work.	No.	Length in m	Breadth in m	Height in m	Quantity	Explanatory Note
	Verandah — Front (long)	1	8.40	0.20	0.40	0.67	H = 27+10+3 = 40cm = 0.4m
	sides (short)	2	2.50	0.20	0.40	0.40	
					Total =	39.96 cu.m	
	Deduct:- Door openings	2	1.20	0.30	2.10	1.51	
	window openings	10	1.00	0.30	1.50	4.50	
	C.S. window openings	12	1.00	0.30	0.50	1.80	
	shelves	2	1.00	0.20	1.50	0.60	
	R.B. lintel over Doors	2	1.40	0.30	0.10	0.084	10cm bearing
	windows	10	1.20	0.30	0.10	0.360	
	C.S. windows	12	1.20	0.30	0.10	0.432 (c)	Total (a)s = 0.948 cu.m
	shelves	2	1.20	0.30	0.10	0.072 (c)	
					Total =	9.36	
				Net Total =		30.10 cu.m	
7.	R.B. lintel works excluding steel and its bending but including centering and shutter and binding steel — over doors, window and shelves	s.	same as for item works a(i) item no. 6 = 0.948				
	over Ver. pillars Front	1	8.40	0.20	0.30	0.504	out to out
	sides	2	2.80	0.20	0.30	0.336	Inside bearing 30cm
					Total =	1.788 cu.m	
8.	R.C.C. work in verandah columns excluding steel and its bending but including form work and binding steel complete their finished		$4 \times \frac{\pi}{4}(0.15)^2 \times$		2.70	= 0.19 cu.m	30cm insertion into the plinth wall below floor.
9.	R.C.C. work excluding steel and its bending, but including centering and shuttering and binding steel, fair finished — Roof slabs rooms	1	8.64	4.84	0.12	5.018	12cm projections
	Roof slab verandahs	1	8.40	2.80	0.10	2.352	10cm inner bearing, excluding chajja.
	chhajja projections ver. front	1	9.30	0.45	0.06	0.251	Average thickness
	ver. sides	2	2.70	0.45	0.06	0.146	
	sun shed and breakers in windows — Top	4	2.50	0.45	0.05	0.225	
	Bottom	4	2.50	0.15	0.05	0.075	5cm insertion into wall.
	sides	4×2	1.50	$\frac{0.50+15}{2}$	0.05	0.195	5cm insertion and average breadth
	shelves slabs	2×3	1.10	0.20	0.05	0.066	
					Total =	8.328 cu.m	
10.	Mild steel bars including bending in reinforcement @ 1% of R.B. and R.C.C. works.		$10.31 \times \frac{1}{100} \times$		78.5 =	8.109	1% of total of item 1, 8.09

Scanned by CamScanner

Item no.	Particulars of item of work.	No.	Length in m	Breadth in m	Height in m	Quantity	Explanatory Note.
11.	10cm Lime concrete on roof terracing complete with surface finishing—						
	Rooms	1	8.00	4.20	—	33.60	clear roof area in between parapet
	Verandah	1	8.00	2.50	—	20.00	clear roof area in between parapet
					Total:-	53.60 sq.m	
12.	3cm thick insulation layer of sand and clay						
	Rooms	1	8.00	4.20	—	33.60	clear roof area
	Verandah	1	8.00	2.50	—	20.00	clear roof area
					Total:-	53.60 sq.m	
13.	Salwood work in chowkhat wrought trimmed and fixed						
	Doors (3cm insertion into floor)	2	5.46	0.12	0.08	0.105	2 vert. = 2.13 m each; 1 Hor. = 1.20m each
	windows	10	5.00	0.10	0.08	0.400	2 vert. = 1.50m each; 2 Hor. = 1.00m each.
	c.s. window	12	3.00	0.08	0.08	0.230	2 vert = 0.50m each; 2 Hor. = 1.00m each
					Total:-	0.735 cu.m	
14.	4cm thick Indian teak wood panelled door and window shutters including fittings.						
	Doors	2	1.07	—	2.035	4.355	Rebate 1.5 (10)
	windows	10	0.87	-	1.37	11.919	
					Total:-	16.274 sq.m	
15.	4cm thick Indian teak wood glazed shutters including fittings						
	c.s. windows	12	0.87	—	0.37	3.863 sq.m	
16.	Iron work (mild steel) in hold basts and windows greatings.						
	Hold basts in doors	2X6	—	—	—	12 nos	6 nos. per door
	Hold basts in window	10X4	—	—	—	40 nos	4 nos. per window
	Hold basts in c.s. windows	12X2	—	—	—	24 nos	2 nos. per c.s. window
					Total	76 nos. @ 1 kg each = 76 kg	
	window bars 16 mm dia. 01.58 kg/m —						
	windows	10X8	1.50	—	—	120	Vert. bars at 10cm centres appx.
	c.s. windows	12X2	1.00	—	—	24	Two horizontal bars.
17.	80mm thick cement plaster 1:3 in step finished cement rendered—						
	1st step riser	1	4.50	—	0.15	1.49	Front and sides
	2nd step riser	1	3.30	—	0.15		Front and sides
	3rd step riser	1	2.10	—	0.15		Front and sides
	1st step tread	1	3.90	-	0.30	2.43	Front and sides
	2nd step tread	1	2.70	—	0.30		Front and sides
	3rd step tread	1	1.50	—	0.30		Front and sides.
	Plinth wall above						
	1st step	2	0.30		0.45	0.27	sides
	2nd step	2	0.30		0.20	0.18	sides
	3rd step	1	1.50		0.15	0.22	sides
					Total:	1.39 sq.m	

Scanned by CamScanner

Centre line method – 2 room building

Total length of centre lines of all walls of room = (2×8.10) + (2×9.30) = 29.10 m
Number of junctions in 2 of similar walls
Total length of all centres lines of all walls of verandah = 8.20 + 2×2.75 = 13.70 m.
Number of junction is 2 of dissimilar walls at the same level

	No.	L. m	B. m	Height m	Quantity	Explanatory Note.
1) Earthwork in excavation in foundation						
Rooms		28.20	0.90	0.90	22.84	$L = 29.10 - 2\times\frac{0.90}{2} = 28.20$ m
Verandah		12.80	0.70	0.90	8.06	$L = 13.70 - 2\times\frac{0.70}{2} = 12.80$ m.
					Total = 30.90 cu.ml.	
2) Lime concrete in foundation						
Rooms	1	28.20	0.90	0.30	7.61	} length same as above.
Verandah	1	12.80	0.70	0.30	2.69	
					Total: 10.30 cu.ml	
3) 1-class brickwork in foundation and plinth in 1:6 cement mortar –						
Rooms –						
1st footing	1	28.40	0.70	0.20	3.98	$L = 29.10 - 2\times\frac{0.70}{2} = 28.40$ m
2nd footing	1	28.50	0.60	0.10	1.71	$L = 29.10 - 0.60 = 28.50$m
3rd footing	1	28.60	0.50	0.10	1.43	$L = 29.10 - 0.50 = 28.60$ m
plinth wall above footing	1	28.70	0.40	0.80	9.18	$L = 29.10 - 0.40 = 28.70$ m
Verandah						
1st footing	1	13.00	0.50	0.20	1.30	$L = 13.70 - 2\times\frac{0.70}{2} = 13.00$ m
2nd footing	1	13.10	0.40	0.10	0.52	$L = 13.70 - 0.60 = 13.10$m
plinth wall above footing	1	13.20	0.30	0.10	0.40	$L = 13.70 - 0.50 = 13.20$m
plinth wall above footing	1	13.30	0.30	0.80	3.19	$L = 13.70 - 0.40 = 13.30$m
					Total: 21.71 cu.ml.	
5) 2cm Damp proof course –						
Rooms	1	28.70	0.40	–	11.48	length same as plinth wall
Deduct door sills	2	1.20	0.40	–	0.96	
					Total = 10.52 sq.ml	
6) 1-class brickwork in superstructure in lime mortar –						
Rooms	1	28.80	0.30	4.00	34.56	$L = 29.10 - 0.30 = 28.80$ m
Verandah above lintel	1	13.40	0.20	0.30	0.80	$L = 13.70 - 0.30 = 13.40$ m
Parapet over room	1	25.20	0.20	0.60	3.02	Total centre line length $= 2\times8.20 + 2\times4.40 = 25.20$ m
Parapet over verandah	1	13.40	0.20	0.40	1.07	Total length = 1×8.40 + 2×2.50 = 13.40 m
					Total: 39.45	
Deduct openings, lintel, etc as usual			–	–	9.36	Details same as
					Net Total = 30.09 cu.ml	

Estimate of a 3 roomed building with front & back verandahs

2×6 The plan and sectional elevation of a building are given in Fig 3.7. Estimate the quantities of the following items of work of the building.
(1) Earthwork in excavation in foundation, (2) Lime concrete in foundation, (3) 1st class brickwork in lime mortar in foundation and plinth, (4) Damp proof course, (5) 1st class brickwork in 1:6 cement mortar in superstructure including parapet, (6) R.C.C. work in roof slabs, lintels, sunshade etc. (7) steel reinforcement bars in R.C.C. work at 1%.

Ans Centre to centre lengths of two adjoining rooms (3.6×4.5m room and 3.6×4.2m room) combined,
Long walls – 9.30 m, short walls – 3.9 m
square room – (3.6×3.6 m room)
long walls – 3.90 m, short walls – 3.90 m

Verandah Centre to centre of 30 cm wall and 30 cm sq pillar –
Front verandah (1.80m wide)
Long wall (front) – 3.90 m, short wall (side) – 2.60 m
Back verandah (2.50 m wide)
Long wall (Back) – 3.90 m, short wall (side) – 2.70 m

Scanned by CamScanner

THREE ROOMED BUILDING WITH FRONT AND BACK VERANDAH

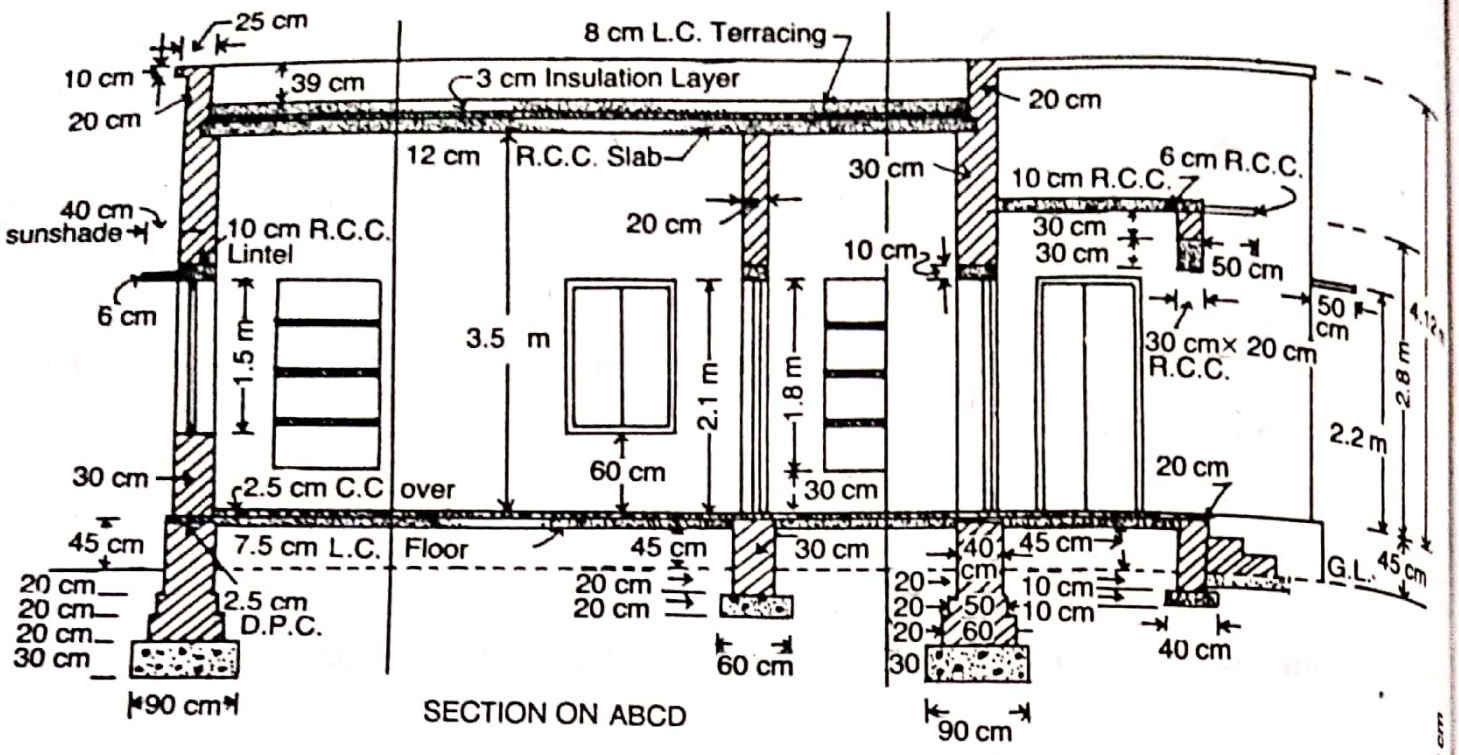

SECTION ON ABCD

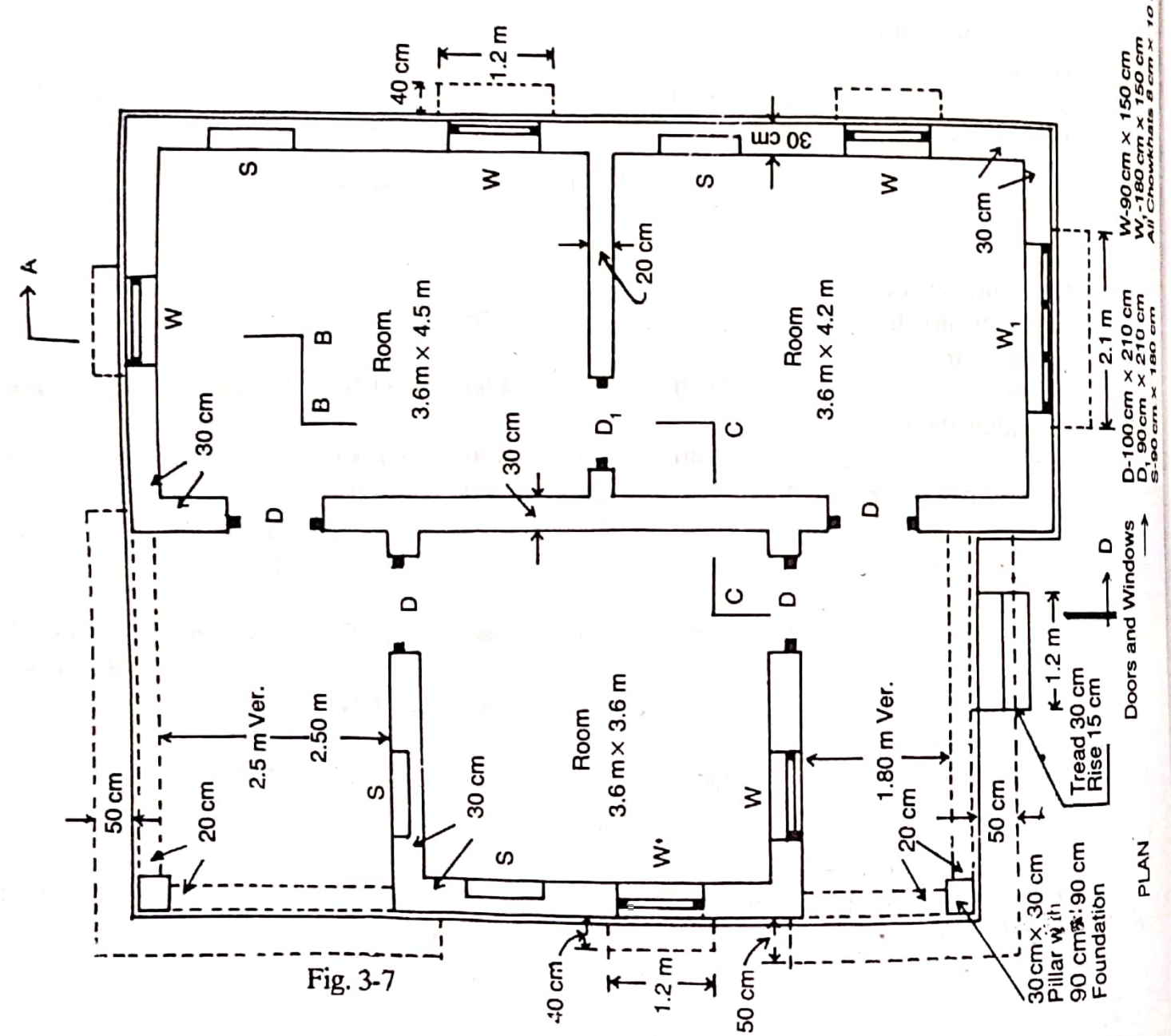

Fig. 3-7

Scanned by CamScanner

Item no	Particulars of item and details of work	No.	Length in m	Breadth in m	Height in m	Quantity	Explantory Note.
1.	Earthwork in excavation in foundation —						
	Adjoining room combined —						
	Long wall	2	10.10	0.90	0.90	16.36	L = 9.20 + 0.90 = 10.10m
	short wall	2	3.00	0.90	0.90	4.86	L = 3.90 - 0.90 = 3.00m
	inter room wall	1	3.00	0.60	0.40	0.72	L = 3.90 - 0.90 = 3.00m
	square room —						
	Long wall (outer)	1	4.80	0.90	0.90	3.88	L = 3.90 + 0.90 = 4.80m
	short walls	2	3.00	0.90	0.90	4.86	L = 3.90 - 0.90 = 3.00m
	verandah pillars	2	0.90	0.90	0.90	1.46	
	Verandah dwarf wall -						
	- long walls (front & back)	2	3.00	0.40	0.20	0.48	L = 3.90 - 0.90 = 3.00m
	short wall (front side)	1	1.10	0.40	0.20	0.09	L = 2.00 - 0.90 = 1.10m
	short wall (back side)	1	1.80	0.40	0.20	0.15	L = 2.70 - 0.90 = 1.80m
	step	1	1.20	0.70	0.10	0.08	
					Total =	32.94 cu.m	
2.	Lime concrete in foundation —						
	Adjoining room combined —						
	Long walls —	2	10.10	0.90	0.30	5.45	L same as item (1)
	short walls	2	3.00	0.90	0.30	1.62	L same as item (1)
	Inter 20cm wall	1	3.40	0.60	0.20	0.41	L = 3.90 - 0.50 = 3.40m
	Square room —						
	Long wall (outer)	1	4.80	0.90	0.30	1.30	L = 3.90 + 0.90 = 4.80m
	short walls	2	3.00	0.90	0.30	1.62	L = 3.90 - 0.90 = 3.00m
	Verandah pillars	2	0.90	0.90	0.30	0.49	
	Verandah dwarf wall -						
	Long wall (front and back)	2	3.50	0.40	0.10	0.28	L = 3.90 - 0.40 = 3.50m
	short wall front (side)	1	1.60	0.40	0.10	0.064	L = 2.00 - 0.40 = 1.60m
	short wall back (side)	1	2.30	0.40	0.10	0.092	L = 2.70 - 0.40 = 2.30m
	step	1	1.20	0.70	0.10	0.084	
					Total =	11.41 cu.m	
3.	I-class brickwork in lime mortar in foundation and plinth —						
	Adjoining rooms combined -						
	Long walls —						
	1st footing	2	9.80	0.60	0.20	2.35	L = 9.20 + 0.60 = 9.80m
	2nd footing	2	9.70	0.50	0.20	1.94	L = 9.80 - 0.10 = 9.70m
	plinth wall	2	9.60	0.40	0.65	4.99	L = 9.70 - 0.10 = 9.60m
	short walls —						
	1st footing	2	3.30	0.60	0.20	0.79	L = 3.90 - 0.60 = 3.30m
	2nd footing	2	3.40	0.50	0.20	0.68	L = 3.30 + 0.10 = 3.40m
	plinth wall	2	3.50	0.40	0.65	1.82	L = 3.40 + 0.10 = 3.50m
	Inter 20 cm wall						
	plinth wall	1	3.50	0.30	0.65	0.68	L = 3.90 - 0.40 = 3.50m
	Square room in between Verandah						
	Long wall (outer) —						
	1st footing	1	4.50	0.60	0.20	0.54	L = 3.90 + 0.60 = 4.50m
	2nd footing	1	4.40	0.50	0.20	0.44	L = 4.50 - 0.10 = 4.40m
	plinth wall	1	4.30	0.40	0.65	1.12	L = 4.40 - 0.10 = 4.30m
	short walls —						
	1st footing	2	3.30	0.60	0.20	0.79	L = 3.90 - 0.60 = 3.30m
	2nd footing	2	3.40	0.50	0.20	0.68	L = 3.30 + 0.10 = 3.40m
	plinth wall	2	3.50	0.40	0.65	1.82	L = 3.40 + 0.10 = 3.50m
	Verandah pillars						
	1st footing	2	0.60	0.60	0.20	0.15	
	2nd footing	2	0.50	0.50	0.20	0.10	
	plinth wall	2	0.40	0.40	0.65	0.21	
	Verandah dwarf walls —						
	Long wall front and back	2	3.50	0.20	0.55	0.77	L = 3.90 - 0.40 = 3.50m
	short side wall (~~front~~)	1	1.60	0.20	0.55	0.18	L = 2.00 - 0.40 = 1.60m

Scanned by CamScanner

Item No.	Particulars item of work	No.	Length in m	Breadth in m	Height in m	Quantity	Explantory Notes
	short side wall (back)	1	2.30	0.20	0.55	0.25	L = 2.70 − 0.40 = 2.30m
	step —						
	1st step	1	1.20	0.60	0.15	0.11	
	2nd step	1	1.20	0.30	0.15	0.05	
					Total:	20.46 cu.mt	
4.	2.5cm damp proof course —						
	Adjoining room combined —						
	Long walls	2	9.60	0.40	—	7.68	L same as plinth wall
	short walls	2	3.50	0.40	—	2.80	
	Inter 20cm wall	1	3.50	0.30	—	1.05	
	Square room —						
	Long wall (outer)	1	4.30	0.40	—	1.72	
	short walls	2	3.50	0.40	—	2.80	
	verandah pillars	2	0.40	0.40	—	0.32	
					Total:	16.37 sq.mt	
	Deduct Door sills —						
	D_0	4	1.00	0.40	—	1.60	
	D_1	1	0.90	0.30	—	0.27	
				Total of deducts		1.87	
				Net Total =		14.50 sq.mt	
5.	1st class brickwork in 1:6 cement mortar in superstructure						
	Adjoining rooms combined —						
	long walls	2	9.50	0.30	3.62	20.63	Ht. up to top of slab
	short walls	2	3.60	0.30	3.62	7.83	Ht. up to top of slab
	Inter 20cm wall	1	2.60	0.20	3.50	2.52	Ht. up to bottom of slab.
	Square room in between verandah —						
	Long wall (outer)	1	4.20	0.30	3.62	4.56	L = 3.90 + 0.30 = 4.20m
	short wall	2	3.60	0.30	3.62	7.82	L = 3.90 − 0.30 = 3.60m
	verandah pillars	2	0.30	0.30	2.80	0.50	
	verandah 20cm wall above lintel —						
	Long wall (front and back)	2	3.60	0.20	0.30	0.43	
	short wall front (side)	1	1.70	0.20	0.30	0.10	
	short wall back (side)	1	2.40	0.20	0.30	0.14	
	Parapet —						Ht of parapet = 0.29 + 0.08 + 0.03 = 0.50m
	Adjoining rooms —						
	outer long wall (out to out)	1	9.50	0.20	0.50	0.95	L = 9.20 + 0.30 = 9.50m
	short walls	2	4.00	0.20	0.50	0.80	L = 3.60 + 0.30 + 0.10 = 4.00m
	Front verandah side	1	2.40	0.20	0.50	0.24	L = 1.80 + 0.60 = 2.40m
	Back verandah side	1	2.50	0.20	0.50	0.25	L = 2.50 + 0.20 − 0.20 = 2.50m
	Square room - outer wall.	1	4.20	0.20	0.50	0.42	L = 3.60 + 0.60 = 4.20m
	walls in between ver. and room	2	3.90	0.20	0.50	0.78	L = 3.60 + 0.20 + 0.10 = 3.90m
					Total:	47.96 cu.mt.	
	Deduct						
	Door openings —						
	D	4	1.00	0.30	2.10	2.52	
	D_1	1	0.90	0.20	2.10	0.38	
	window openings						
	W	5	0.90	0.30	1.50	2.02	
	W_1	1	1.80	0.30	1.50	0.81	
	shelves	4	0.90	0.20	1.80	1.30	
	Lintel over doors, window and shelves.	same as for items marked (a)				0.567	Bearing of roof slab not deducted may be deducted if specified
				Total deducting		7.60	
				Net Total =		40.36 cu.mt	

Scanned by CamScanner

Item No.	Particulars item of work	No.	Length in m	Breadth in m	Height in m	Quantity	Explanatory Note.
6.	R.C.C. work 1:2:4 excluding steel and its bending, but including centering and shuttering and binding steel						
	Roof slab –						
	Adjoining rooms combined	1	9.20	3.90	0.12	4.286	Bearing 15cm
	square room	1	3.90	3.90	0.12	1.825	Bearing 15cm
	verandah front	1	4.05	2.15	0.10	0.871	Bearing 15cm
	verandah back	1	4.05	2.85	0.10	1.154	
	Verandah chajja –						
	Front and back long	2	4.55	0.50	0.06	0.273	
	side (front)	1	2.15	0.50	0.06	0.065	
	side (back)	1	2.85	0.50	0.06	0.085	
	Sunshades over windows						
	W	4	1.20	0.40	0.06	0.115	
	W_1	1	2.10	0.40	0.06	0.050	
	Lentel over door, window, shelves –						
	Door D	4	1.30	0.30	0.10	0.156 (a)	Bearing 15cm
	Door D_1	1	1.20	0.20	0.10	0.024 (a)	Total ob (a) : 0.567 cu.m
	window W	5	1.20	0.30	0.10	0.180 (a)	
	window W_1	1	2.10	0.30	0.10	0.063 (a)	
	Shelves S	1	1.20	0.30	0.10	0.144 (a)	
	Verandah lintels						
	front and back long	2	4.10	0.20	0.30	0.492	Bearing over wall 20cm
	side (front)	1	2.00	0.20	0.30	0.120	
	side (back)	1	2.70	0.20	0.30	0.162	
					Total =	10.085 cu.m.	
7.	Steel reinforcement bars including bending at 1%						
			10.085 × 1/100 cum = 0.1009 cu.m @ 78.5 q/cum = 0.1009 × 78.5 = 7.929 q				

Three room building with front and back verandah

Centreline method

(i) Total centreline length of all 30cm walls – Total centreline lengths of two long walls and two outer short walls of the right side rooms (combined) and of the three walls of the remaining room (square room) = (2×9.20 + 2×3.90) + (3×3.90) = 37.90 m.
Number of junctions are 2 with 30cm walls.

(ii) Total centre line lengths of 20cm inter wall = 3.90 m.
Numbers of junction are 2 with 30cm wall.

(iii) Total centre line length of all 20cm walls of front and back verandah = Total centreline length of the front verandah long wall and side wall and of the back verandah long wall and side wall = (3.90 + 2.00) + (3.90 + 2.70) = 12.50 m.
Numbers of junction are 8 (4 with 30cm walls and 4 with 30cm pillars)

(iv) Total length of parapet wall, over outer walls of right side rooms and over outer walls of square room = Right side long wall + front and back outer walls + (walls by the right side of front and back verandah) + (outer walls of square room + front and back walls of square room) = (9.50 + 2×4.00 + 2.40 + 2.50) + (4.20 + 2×2.90) = 22.40 + 12.00 = 34.40 m

Scanned by CamScanner

Item No.	Particulars of item of works	No.	Length in m	Breadth in m	Height in m	Quantity	Explantory Notes
1.	Earthwork in excavation in foundation						
	All 30cm walls	1	37.00	0.90	0.9	29.97 cu.m	$L = 37.90 - 2 \times \frac{0.90}{2} = 37.00$m
	20cm inter wall	1	3.60	0.60	0.40	0.72	$L = 3.90 - 2 \times \frac{0.90}{2} = 3.00$m
	verandah pillars	2	0.90	0.90	0.90	1.46	
	All 20 cm wall of verandah	1	8.90	0.40	0.20	0.71	$L = 12.50 - 8 \times \frac{0.90}{2} = 8.90$m
	step	1	1.20	0.60	0.10	0.07	
					Total:	32.93 cu.mt.	
2.	Lime concrete in foundations						
	All 30 cm walls	1	37.00	0.90	0.30	9.99	Length same as above.
	20cm inter wall	1	3.40	0.60	0.20	0.41	$L = 3.90 - 2 \times \frac{0.50}{2} = 3.40$ m
	verandah pillars	2	0.90	0.90	0.30	0.49	
	All 20cm wall of verandah	1	10.90	0.40	0.10	0.44	$L = 12.50 - 8 \times \frac{0.40}{2} = 10.90$m
	step	1	1.20	0.60	0.10	0.07	
					Total:	11.40 cu.m	
3.	1-class brickwork in lime mortar in foundation and plinth.						
	All 30 cm walls —						
	1st footing	1	37.40	0.60	0.20	4.48	$L = 37.90 - 2 \times \frac{0.60}{2} = 37.30$m
	2nd footing	1	37.40	0.50	0.20	3.74	$L = 37.90 - 2 \times \frac{0.50}{2} = 37.40$m
	20cm wall inter wall, plinth	1	3.50	0.30	0.65	0.68	$L = 8.90 - 2 \times \frac{0.40}{2} = 3.50$m
	Verandah pillars						
	1st footing	2	0.60	0.60	0.20	0.15	
	2nd footing	2	0.50	0.50	0.20	0.10	
	plinth wall	2	0.40	0.40	0.65	0.21	
	All 20cm wall verandah walls, plinth, steps —						
	1st	1	1.20	0.60	0.15	0.11	
	2nd	1	1.20	0.30	0.15	0.05	
					Total:	20.47 cu.m	
4.	2.5cm Damp proof course -						
	All 30cm walls	1	37.50	0.40	—	15.00	
	20cm ~~wall~~ inter walls	1	3.50	0.30	—	1.05	
	verandah pillars	2	0.40	0.40	—	0.32	
					Total:	16.37	
	Deduct door sill	same as				1.87	
					Net Total:	14.50 sqm	
5.	1-class brickwork in 1:6 cement mortar in superstructure						
	All 30cm walls	1	37.60	0.30	3.62	40.83	$L = 37.90 - 2 \times \frac{0.30}{2} = 37.60$m
	20cm inter wall	1	3.60	0.20	3.50	2.52	$L = 3.90 - 2 \times \frac{0.30}{2} = 3.60$m
	verandah pillars	2	0.30	0.30	2.80	0.50	No. of junction 4 with 30cm walls
	All 20cm wall of verandah above plinth including over pillars. parapet wall	1	11.90	0.20	0.30	0.71	$L = 12.50 - 4 \times \frac{0.30}{2} = 11.90$m
	20cm walls	1	34.40	0.20	0.40	2.75	Total length of all walls
	25cm walls	1	34.40	0.25	0.10	0.86	
					Total:	48.17 cum.	
	Deduct doors and window openings & lintel	same a				7.60	
					Net Total:	40.57 cu.m	

Scanned by CamScanner

ESTIMATE OF A HEXAGONAL ROOM

Hexagonal Room

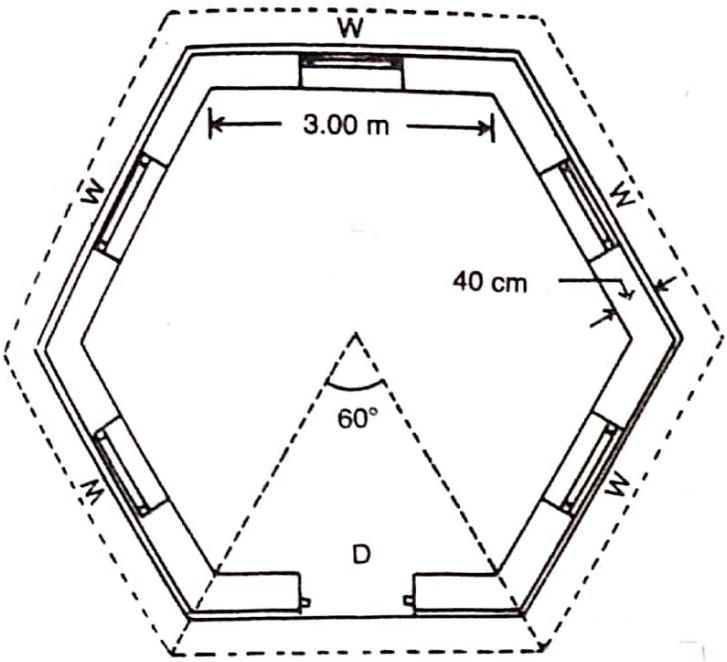

Plan

SCHEDULES :-

D-120 cm × 210 cm(1.20 m × 2.10 m)
W-110 cm × 150 cm(1.10 m × 1.50 m)

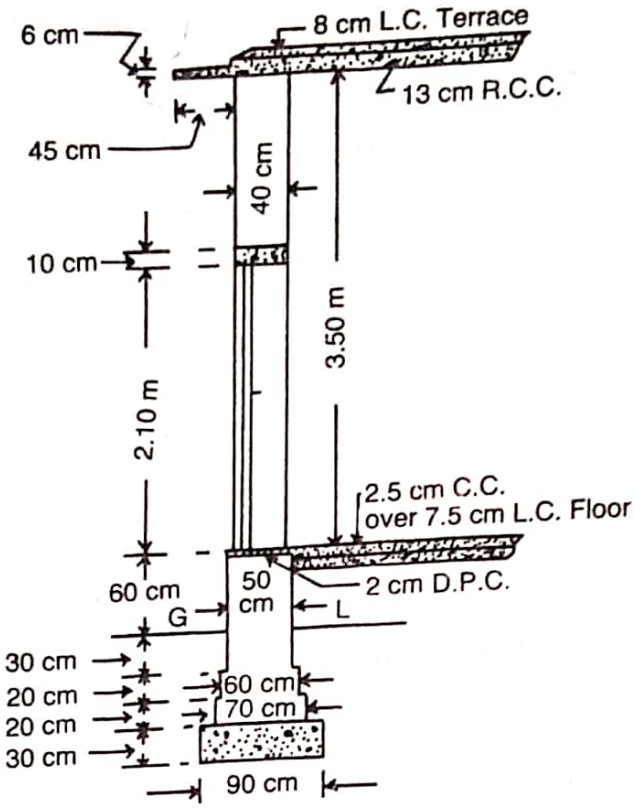

CROSS SECTION OF WALL THROUGH DOOR

Fig. 3-11

Scanned by CamScanner

Ex.6 The plan and part cross-section of a hexagonal room are given in (Fig 3.11). Estimate the quantities of - (1) Earthwork in excavation in foundation, (2) Lime concrete in foundation (3) 1-class brickwork in foundations and plinth in lime mortar, (4) Damp proof course, (5) 1-class brickwork in superstructure in lime mortar, (6) R.C.C. work in roof including chhajja and lintels, (7) Lime concrete in roof terracing, (8) 2.5cm c.c. over 7.5cm L.C. floor and (9) 12mm cement plastering 1:6 inside and outside walls.

Ans The length of the centre line and the area of the hexagonal may be calculated as below: Fig 3.12. represents $\frac{1}{6}$th of the hexagon. The sides of a hexagonal form equilateral triangles at the centre.

Length of centre line of one side $l_m = 3.00 + 2 \times \frac{0.20}{\tan 60^\circ} = 3.00 + 2 \times \frac{0.20}{1.732} = 3.23$ m

Therefore, total length of centre lines $= 6 \times 3.23 = 19.38$ m.

Outer length of superstructure wall $l_1 = 3.00 + 2 \times \frac{0.40}{\tan 60^\circ}$

$= 3.00 + 2 \times \frac{0.40}{1.732} = 3.46$ m

outer length of plinth wall $= 3.00 + 2 \times \frac{0.45}{\tan 60^\circ} = 3.00 + 2 \times \frac{0.45}{1.732}$

$= 3.52$ m

outer length of chhajja $l_2 = 3.00 + 2 \times \frac{0.85}{\tan 60^\circ} =$

$= 3.00 + 2 \times \frac{0.85}{1.732} = 3.98$ m.

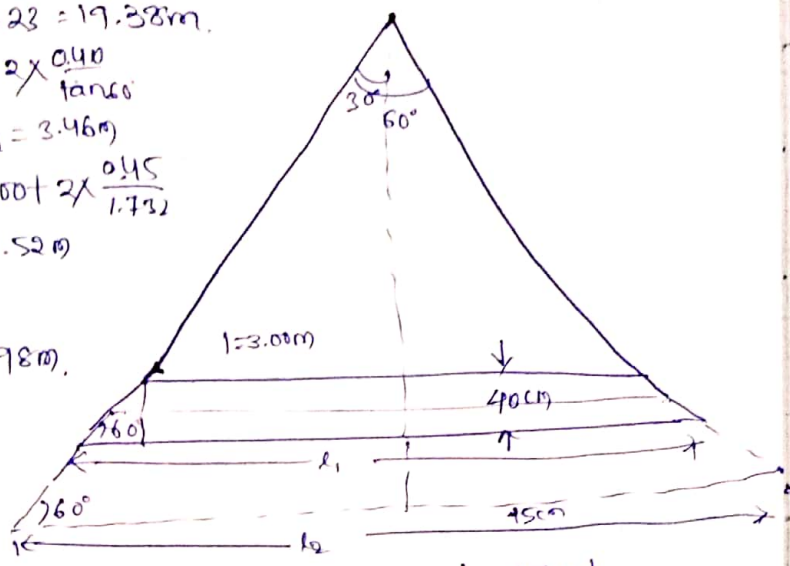

Floor area: 6 x area of one inside triangle

$= 6 \times (\frac{1}{2} \times \text{base} \times \text{altitude}) \times \frac{1}{2} \times \tan 60^\circ$

$= 6 \times (\frac{1}{2} \times 3.00 \times 3.00) \times \frac{1}{2} \times \tan 60^\circ$

$= 6 \times (\frac{1}{2} \times 3 \times 3 \times \frac{1}{2} \times 1.732)$

$= 23.38$ sq.m

Roof area = 6 x area of one outside triangle $= 6 \times (\frac{1}{2} \times 3.46 \times 3.46 \times \frac{1}{2} \times 1.732)$

$= 31.10$ sq.m.

Item No.	Particulars of item of works	No.	Length in m	Breadth in m	Height in m	Quantity	Explantory Notes
1.	Earthwork in excavation in foundation	1	19.38	0.90	1.00	17.44 cu.m	L = Total length of centre line
2.	Lime concrete in foundation	1	19.38	0.90	0.30	5.23 cu.m	} 3/10 of excavation.
3.	1-class brickwork in foundation and plinth in lime mortar —						
	1st footing	1	19.38	0.70	0.20	2.71	
	2nd footing	1	19.38	0.60	0.20	2.33	
	plinth wall	1	19.38	0.50	0.90	8.72	
					Total:	13.76 cu.m	
4.	2cm Damp proof course	1	19.38	0.50	—	9.69	
	Deduct door sill	1	1.20	0.50	—	0.60	
				Net	Total:	9.09 sq.m	
5.	1-class brickwork in superstructure in lime mortar	1	19.38	0.40	3.50	~~67.82~~ 27.72	
	Deduct —						
	Door openings	1	1.20	0.40	2.10	1.01	
	window openings	5	1.10	0.40	1.50	3.30	
	Lentel over door	1	1.40	0.40	0.10	0.06	} 10cm bearing
	Lentel over windows	5	1.30	0.40	0.10	0.26	
				Total deduction		4.63	
				Net Total:		22.50 cu.m	

Scanned by CamScanner

Item No.	Particulars of item of work	No.	Length in m	Breadth in m	Height in m	Quantity	Explantory Notes
6.	R.C.C. work complete with steel reinforcement –						
	Roof slab	$6\times\frac{1}{2}\times3.46\times\frac{3.46}{2}$			$\times1.75\times0.13$	$=4.04$	6 × area of one triangle of side of outer wall × thickness
	chhajja	$6\times\frac{3.46+3.58}{2}$		$\times0.5\times0.06$		$=0.60$	6 × mean length × breadth × thickness
	Lintel	same as above item (3)				0.32	
					Total	4.96 cum	
7.	8cm Lime concrete in roof terracing	$6\times\frac{1}{2}\times3.46\times\frac{3.46}{2}\times1.75$				21.10 sqm	same area as bot R.C.C. roof
8.	2.4cm C.C. over and including 7.5cm L.C. floor	$6\times\frac{1}{2}\times3\times3\frac{1}{2}\times1.75\times2$				23.38 sq.m	6 × area of one triangle of side of inner length
9.	12mm cement plastering 1:6 in walls.						
	Inside	6	3.00	–	3.50	63.00	
	outside above plinth	6	3.46	–	3.50	72.66	
	outside plinth wall	6	3.52	–	0.70	14.78	including 10cm below 9.1
					Total =	150.44	
	Deduct Door opening	1	1.20	–	2.10	2.52	one face
	Deduct window	5	1.10	–	1.50	8.25	one face
					Total	10.77	
					Net Total =	139.67 sq.m	

Ex.9 From the attached plan and the detail of wall section (Fig B-13) estimate the quantities of

(1) Earthwork in foundation
(2) Concrete in foundation
(3) Brickwork in foundation and plinth in 1:6 cement mortar
(4) 2cm Damp proof courses at plinth level
(5) Brickwork in superstructure in lime mortar.
(6) 2.5cm C.C. over 7.5cm L.C. floor.

Ans centre to centre length of inclined wall

$=\sqrt{(1.95+0.15)^2+(1.125+0.15)^2}$

$=\sqrt{2.1^2+1.275^2}=\sqrt{6.04}=2.46$m (approximately)

Total centre line lengths of walls $=4.80+(2\times4.15)+(2\times2.46)+2.25=20.27$m

Item No.	Particulars item of work	No.	Length in m	Breadth in m	Height in m	Quantity	Explantory Notes
1.	Earthwork in excavation in foundation	1	20.27	0.90	0.90	16.42 cu.m.	L = Total centre length = 20.27m
2.	Concrete in foundation	1	20.27	0.90	0.30	5.47 cum	
3.	Brickwork in foundation and plinth in 1:6 cement mortar –						
	1st footing	1	20.27	0.70	0.20	2.84	
	2nd footing	1	20.27	0.60	0.20	2.43	
	3rd footing	1	20.27	0.50	0.20	2.03	
	plinth wall	1	20.27	0.40	0.60	4.86	
					Total =	12.16 cu.m	

Scanned by CamScanner

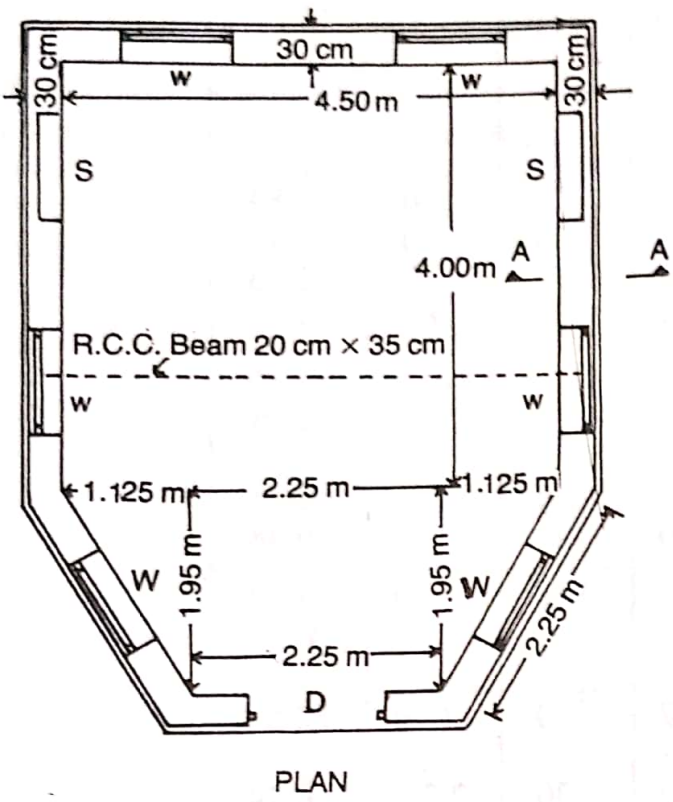

PLAN

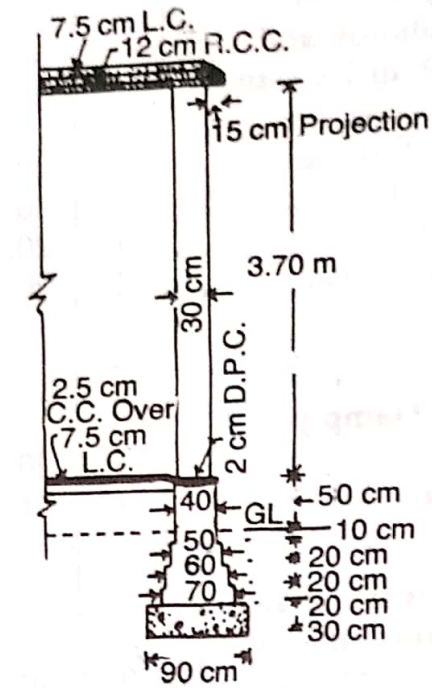

SECTION ON A A

D-120 cm × 220 cm
W-100 cm × 150 cm
S-100 cm × 190 cm

Fig. 3-13

Scanned by CamScanner

No.	Particulars of item of work	No.	Length in m	Breadth in m	Height in m	Quantity	Explanatory Note
4.	2 cm Damp proof course	1	20.27	0.40	—	8.11	
	Deduct door sill	1	1.20	0.40	—	0.48	
			Net Total			7.63 sq.m	
5.	Brickwork in superstructure in lime mortar	1	20.27	0.30	2.70	22.50	
	Deduct —						
	Door opening	1	1.20	0.30	2.20	0.79	
	window opening	6	1.00	0.30	1.50	2.70	
	shelf	2	1.00	0.20	1.90	0.76	
	Lintel over door	1	1.44	0.30	0.10	0.43	
	Lintel over windows	6	1.24	0.30	0.10	0.223	10 cm thick lintel
	Lintel over shelf	2	1.24	0.30	0.10	0.074	12 cm bearing
				Total deduct		4.59	
			Net Total =			17.91 cu.m	
6.	2.5 cm C.C. over 7.5 cm Lime concrete floor,						
	Rectangular portion	1	4.50	4.00	—	18.00	
	Front half	1	$\frac{4.5+2.25}{2} \times 1.91$		—	6.58	
	Door sill	1	1.20	0.35	—	0.42	only 2.5 cm c.c
				Total:		25.00 sq.m.	

SLOPING ROOF

sloping roof may be of —

(i) Galvanised Corrugated Iron sheet, (G.C.I. sheet)
(ii) Asbestos cement sheet (A.C. sheet).
(iii) Tiles,
(iv) Timber,
(v) planks, Thatch, and.
(vi) Slate.

Ans Prepare a detailed estimate of the verandah roof of a building from the given plan and sectional drawing (fig 4.5). The verandah roof consists of 24 B.G. G.I. sheets supported over salwood rafters and purlins. Woodwork shall be painted two coats over one coat of priming. Assume suitable rates.

Ans Length of rafter, hip rafter and jack rafter may be calculated as below.

Rafter — Fig 4.5 (i)

Length of rafter $= \sqrt{3.15^2 + 1.05^2} = \sqrt{11.02} = 3.32$ m

Adding 15 cm for insertion into wall length of rafter comes to 3.47 m. sloping breadth of G.I. sheet roof is 3.32 m + 5 cm = 3.37 m (5 cm outer projection beyond end of rafter)

Hip rafter Fig 4.5 (ii)

Length of hip rafter $= \sqrt{3.15^2 + 3.32^2} = \sqrt{20.94} = 4.58$ m

Adding 15 cm for insertion into wall the length of hip rafter comes to 4.73 m.

Length of ridge (5 cm insertion into wall and 5 cm outer projection) = 4.58 + 0.05 + 0.05 = 4.68 m

Jack rafter - Fig 4.5 (iii)

$$\frac{L}{3.32} = \frac{2.45}{3.15}$$

$$L = 3.32 \times \frac{2.45}{3.15} = 2.58 \text{ m.}$$

Length of rafter is 2.58 m.

Scanned by CamScanner

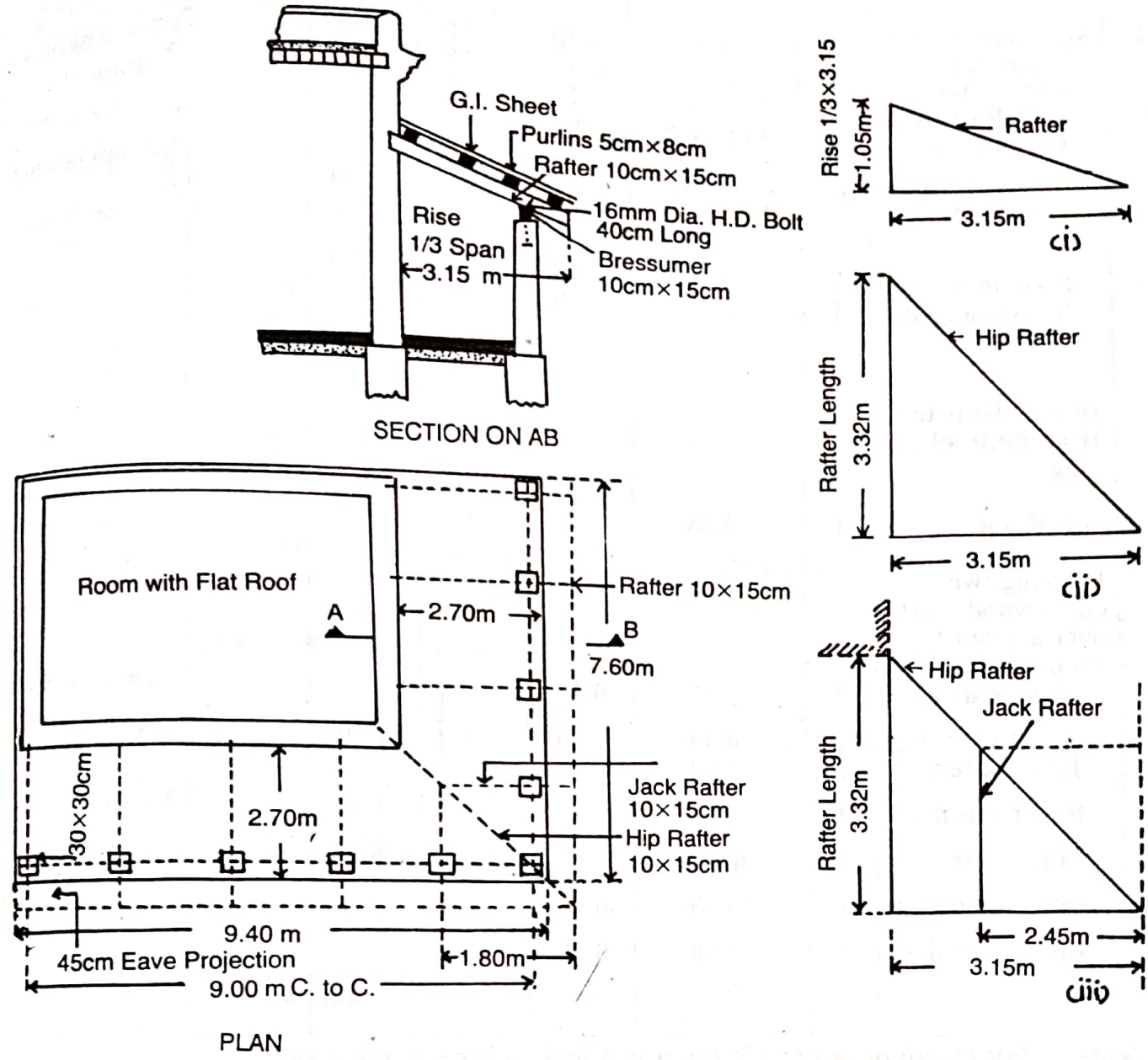

Fig. 4-5

Scanned by CamScanner

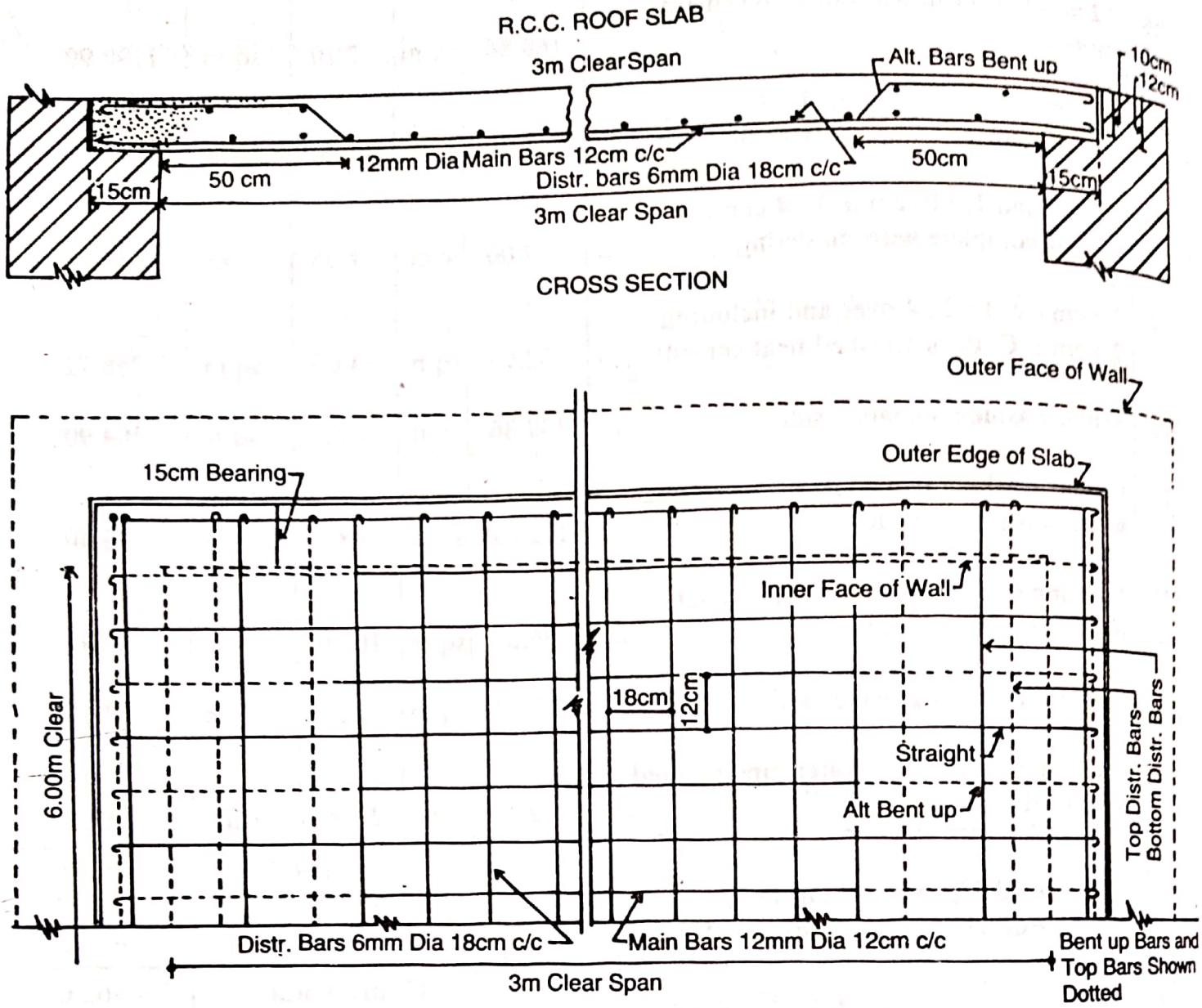

Fig. 5-4

Note—*In plan bent up and top bars have been shown in dotted lines.*

Scanned by CamScanner

Item No	Particulars of items of work	No.	Length in m	Breadth in m	Height in m	Quantity	Explantory Notes
1.	G.C.I. sheet roof in Verandah –						
	front	1	$\frac{9.85+6.70}{2}$	3.37	—	27.89	} Avg. length
	side	1	$\frac{8.05+9.90}{2}$	3.37	—	21.82	
					Total =	49.71 sqm	
2.	Salwood work —						
	Main Rafters	7	3.47	0.10	0.15	0.364	} for length
	Hip Rafters	1	4.73	0.10	0.15	0.071	
	Jack rafters	2	2.58	0.10	0.15	0.077	
	purlin front	4	$\frac{9.85+6.70}{2}$	0.05	0.08	0.132	} Avg. length
	purlin side	4	$\frac{8.05+9.90}{2}$	0.05	0.08	0.104	
	Bressumer front	1	9.30	0.10	0.15	0.140	
	Bressumer side	1	7.50	0.10	0.15	0.113	
					Total =	1.001 cum	
3.	16mm diameter H.D. Bolts 40cm long	10	—	—	—	10 nos	
4.	G.I. Ridge	1	4.68	—	—	4.68m	
5.	painting two coats wood work over a coat of priming –						
	Main Rafters	7	3.47	0.50	—	17.64	B = perimeter = 34.18×0.5 = 17.09
	Hip Rafter	1	4.73	0.50	—		
	Jack rafter	2	2.53	0.50	—		
	Purlins front	4	8.275	0.26	—	8.61	} Avg. length same as in Item 2
	purlins side	4	8.475	0.26	—	6.73	
	Bressumer front	1	9.30	0.50	—	8.40	16.8×0.5 = 8.40
	Bressumer side	1	7.50	0.50	—		
					Total =	40.78 sq.m	

Ex 2 Prepare a detailed estimate of a R.C.C Roof slab of 3 metres clear span and 6 metres long from the given drawing (Fig 5.4). R.C.C. work including centering and shuttering and steel reinforcement in details shall be taken separately.

Item No	Particulars of items of work	No.	Length in m	Breadth in m	Height in m	Quantity	Explantory Notes
1.	R.C.C. work 1:2:3 excluding steel and its bending but including centering and shuttering and binding steel	1	6.30	3.30	0.12	2.495 cum	No deduction for steel bar
2.	Steel bars including bending (mild steel in R.C.C. work —						
	Main bars 12mm dia @ 0.89 kg/m						Side cover 4cm
	Straight bars 24cm c/c						L = 3.30 − 2 side covers + 2 hooks
	(No. = $\frac{6.30-0.08}{0.24}+1 = 27$)	27	3.44				= 3.30 − 0.08 + 2×0.12
	Bent up bars 24 cm c/c.						= 3.44m
	(No = $\frac{6.30-0.08}{0.24} = 26$)	26	3.52				Adding one depth extra for two bent ups.
						Total 184.40 @ 0.89 kg/m	
						= 184.40 × 0.89	
						= 164.12 kg.	

Scanned by CamScanner

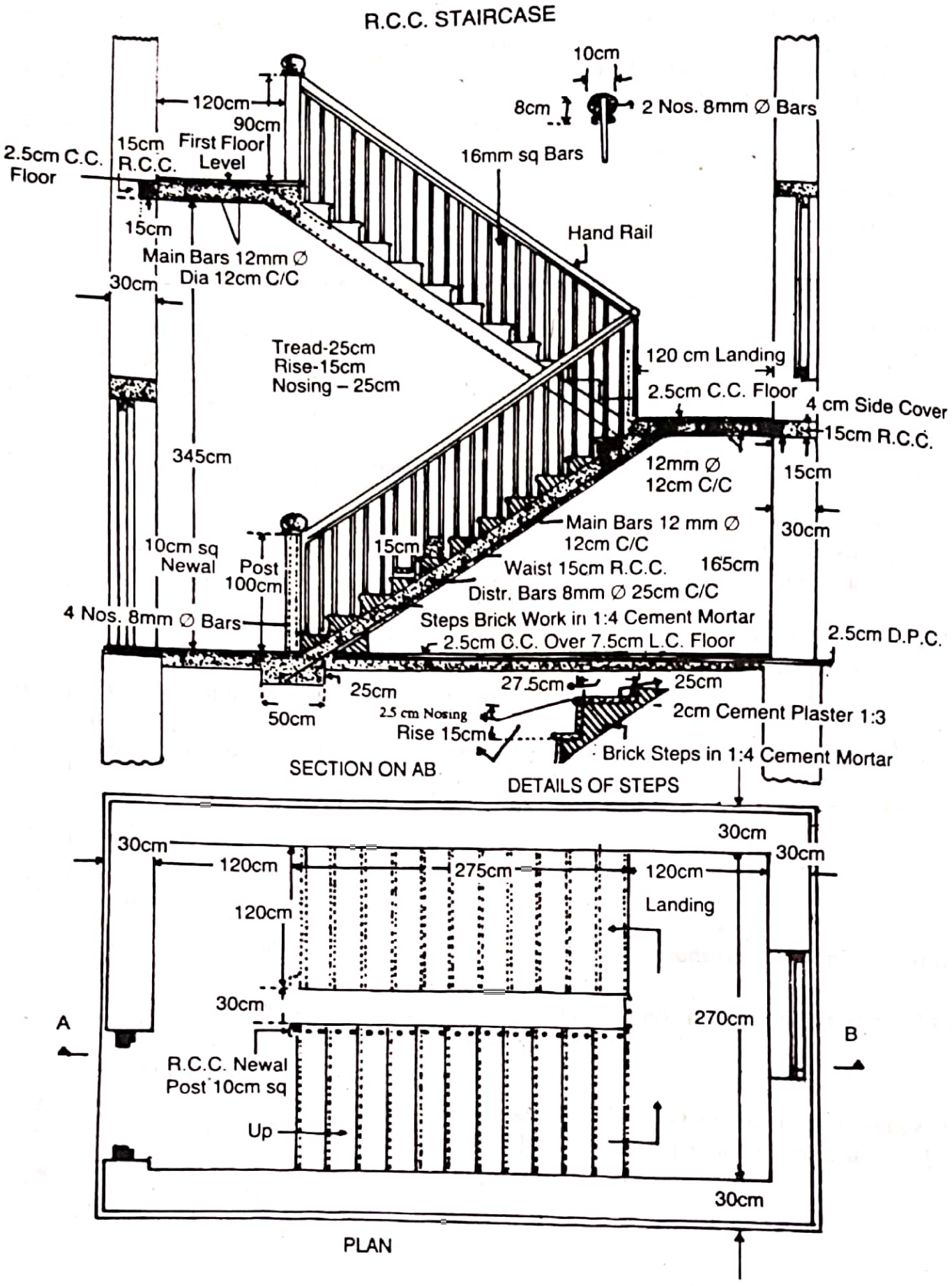

Fig. 5·8

Scanned by CamScanner

Particulars item of work	No	Length in m	Breadth in m	Height in m	Quantity	Explantory Note
Distribution bars 8mm (dia. @ 0.22 kg/m Bottom bars central portion 18cm c/c (No. = $\frac{2.00}{0.18}+1=12$) Bottom bars two sides Top bars two sides	12 2×3 2×3	6.33 6.33 6.33				L = 6.30 − 0.08 + (12 × 0.006) = 6.33 m
	Total	151.92 @ 0.22 kg/m = 151.92 × 0.22 = 33.42 kg				
					Total = 197.54 kg 1.975 quintal	

Ex: Prepare a detailed estimate of R.C.C. staircase from the given plan and section (Figs 8)

Item No	Particulars of items of work	No.	Length in m	Breadth in m	Height in m	Quantity	Explantory Notes
1.	R.C.C. work 1:2:4 excluding steel and its bending but including centering and shuttering and binding steel— Base of flights in ground floor slab of flights (inclined) Landing middle and first floor	1 2 2	1.20 3.21 2.70	0.50 1.20 1.35	0.25 0.15 0.15	0.150 1.156 1.094	$L=\sqrt{2.75^2+1.65^2}=3.21$ m Bearing 15 cm.
					Total =	2.40	cu.ml
2.	Brickwork in steps in 1:4 cement mortar (cut brickwork)	2×11	1.20	× ½ (0.25 × 0.15)		0.495	cu.m
3.	20mm cement plaster 1:6 in steps finished neat cement floating— Tread and Rise Ends of steps	2×11 2×11	1.20	× (0.25+0.15) × ½ × (0.25+0.15)		10.56 0.41	
					Total =	10.97	sq.ml.
4.	2.5cm Nosing in steps in 1:3 cement mortar	2×12	1.20	—	—	28.80	r.m
5.	2.5cm c.c. floor 1:2:4 finished neat cement floating in landings middle and first floor	2	2.70	1.20	—	6.48	sq.m
6.	steel work including bending in reinforcement and railing (i) 12mm Dia. bars @ 0.89 kg/m in R.C.C. work— Main bars in flight and landing No. of bars = $\frac{120}{12}+1$ = 11 nos.	11	5.22				L = 4.10 + 0.90 + 0.18 dia. = 5.00 + (18 × 0.12) = 5.22 m
	Main bars in upper flight and middle and first floor landings Top bars first floor landings	11 11	6.25 1.80				L = 1.30 + 3.70 + 1.05 + 18 × 0.12 = 6.25 m L = 1.08 + 0.61 + 9 × 0.12 = 1.80 m
	Extra bars first floor middle of each landing	2	1.49				L = 1.20 + 0.15 − 2 covers + 2 hooks = 1.49 m
		Total =	140.95	× 0.89 =		132.54 kg	

Scanned by CamScanner

Item No.	Particulars of item of work	No.	Length in m	Breadth in m	Height in m	Quantity	Explanatory Notes
	(i) 8mm Dia distributing bars @ 0.39 kg in R.C.C. work - 1 lower flight 15 nos. and upper flight 14 nos.	29	1.27				L = 1.20 - 2 covers + 2 hooks = 1.27
	Middle landing 9 nos. and upper landing 9 nos.	17	2.77				L = 2.70 - 2 covers + 2 hooks = 2.77 m.
			83.92	× 0.39	= 32.73	kg	
(ii)	16mm sq bars in railing @ 2.01 kg	47	0.90	× 2.01	= 85.02	kg	No (11 × 2 × 2) + 3 m middle landing = 47 nos.
					Total	250.3 kg = 2.503 q	
7.	R.C.C. 1:2:4 hand rail inclusive reinforcement centring and shuttering finished neat cement floating with moulding	1	6.82	-	-	6.82 rm	L = 2 × 3.21 + 0.40 = 6.82 m
8.	R.C.C. 1:2:4 Newelposts including steel reinforcement and bonn-work finished Ground Floor	1	1.00	0.10	0.10	0.01	
	First floor	1	0.90	0.10	0.10	0.01	
					Total	0.02	cu.m
9.	Cap of Newel post of C.C.			-		2 nos	2 nos.

Analysis of Rate:

The determination of rate per unit of a particular item of work, from the cost of quantities of materials, the cost of labourers and other miscellaneous petty expenses requires for its completion is known as the analysis of rate. A reasonable profit usually 10% for the contractor is also included in the analysis of rate. Rates of materials are usually taken as the rates delivered at the site work and include the first cost, cost of transport, railway freight if any, taxes etc. If the materials are to be carried from a distant place, more than 8 kms (5 miles), then cost of transport is also added. The rates of materials and labour vary from place to place and therefore, the rates of different items of work also vary from place to place.

For the purpose of analysis, the details about all the operations involved in carrying out the work should be available, the quantities of materials required and their costs should be known and the number of different categories of labourers required and the capacity of doing work per labourer and their wages per day should be known. These can be known only from experience of practical works.

Overhead costs: Overhead costs include general office expenses, rents, taxes, supervision and other costs which are indirect expenses and not productive expenses on the job.

The miscellaneous expenses on overheads may be under the following heads

A. General overheads:

(i) Establishment (office staff)
(ii) Stationary, printing, postages, etc.
(iii) Travelling expenses
(iv) Telephone,
(v) Rent and taxes.

B- Job overhead

(a) Supervision (Salary of Engineers, Overseers, Supervision etc)
(b) Handling of materials
(c) Repairs, carriage and depreciation of T. and P
(d) Amenities of labour.
(e) Workmen's compensation, insurance, etc

Scanned by CamScanner

(f) Interest on investment
(g) Losses on advances

The contractor may be allowed a net profit of 6 to 8%, and the miscellaneous overhead expenses may come to about 5 to 10% find overhead expenses and contractor's profit 15% of the actual cost may be reasonable amount but it is usual practice to add 10 to 15 percent for all these under the head profit. For small works overhead cost may be very little.

The analysis of rate is usually worked out for the unit of payment of the particular item of work under two heads—

(a) Materials and
(b) Labour

Task:- The capacity of doing work by an artisian or skilled labour in the form of quantity of work per day in known as the task-work or out-turn of the labour.

The following may be taken as the approximate quantity of work or out-turn or task for an average artisian per day

Particulars of item.	Quantity	Per day
1. Brickwork in lime or cement mortar in foundation and plinth	1.25 cu.m	(45 cuft) per mason
2. — DO — in superstructure	1.00 cu.m	(35 cuft) per mason
3. Brickwork in mud mortar in foundation and plinth	1.50 cu.m	(55 cuft) per mason
4. — DO — in superstructure	1.25 cu.m	(45 cuft) per mason
5. Brick in cement or lime mortar in arches	0.55 cu.m	(45 cuft) per mason
6. — DO — in jack arches	0.55 cu.m	(20 cuft) per mason
7. Half brick wall in partition	5.00 sqm	(50 sqft) per mason
8. Coursed rubble stone masonry in lime or cement mortar including dressing	0.80 cu.m	(30 cuft) per mason
9. Random rubble stone masonry in lime or cement mortar	1.00 cu.m	(35 cuft) per mason
10. Ashlar masonry in lime or cement mortar	0.40 cu.m	(15 cuft) per mason
11. Stone arch work	0.40 cu.m	(15 cuft) per mason
12. Lime concrete in foundation or floor	8.50 cu.m	(300 cuft) per mason
13. Lime concrete in roof terracing	6.00 cu.m	(200 cuft) per mason
14. cement concrete 1:2:4	5.00 cu.m	(175 cuft) per mason
15. R.B. work	1.00 cu.m	(35 cuft) per mason
16. R.C.C. work	3.00 cu.m	(125 cuft) per mason
17. 12mm ($\frac{1}{2}$") plastering with cement or lime mortar	8.00 sq.m	(80 sqft) per mason
18. pointing with cement or lime mortar	10.00 sq.m	(100 sqft) per mason
19. White washing or colour washing 3 coats	70.00 sq.m	(700 sqft) per white washer.
20. White washing or colour washing 2 coats	200.00 sq.m	(2000 sqft) per white washer
21. Painting or varnishing doors or windows one coat	25 sq.m	(250 sqft) per painter.
22. coal tarring or solignum painting one coat	35.00 sqm	(350 sqft) per painter
23. Painting large surface one coat	35.00 sq.m	(350 sqft) per painter.
24. Distempering one coat	35.00 sq.m	(350 sqft) per painter.
25. 2.5cm (1") C.C. floor	7.50 sq.m	(75 sqft) per painter.
26. Flagstone floor laying with lime or cement mortar excluding L.C.	10.00 sq.m	(100 sqft) per painter.
27. Terrazo floor 6mm thick mosaic work over 2cm thick cement concrete (1:2:4)	5.00 sq.m	(150 sqft) per mason
28. Bridge-on-edge in floor lime or cement mortar excluding L.C.	7.00 sq.m	(70 sqft) per mason
29. Brick flat floor as in above	8.00 sq.m	(80 sqft) per mason
30. Timber framing sal or teak wood	0.07 cu.m	(2.5 cuft) per carpenter
31. — DO — country wood	0.15 cu.m	(5 cuft) per carpenter

Scanned by CamScanner

Particulars of item	Quantity	Per day
32. Door and window shutters panelled or glazed	0.15 sqm	(1.5 sqft) per carpenter
33. - DO - battened	0.80 sqm	(8 sqft) per carpenter
34. Sawing hard wood	1.00 sqm	(40 sqft) per pair of sawers
35. Sawing of soft wood	6.00 sqm	(60 sqft) per pair of sawers
36. Single Allahabad tiling or Mangalore tiling	6.00 sqm	(60 sqft) per tile layer
37. Double Allahabad tiling	4.00 sqm	(40 sqft) per tile layer
38. Breaking of brick ballast 40 mm ($1\frac{1}{2}$") gauge	0.75 cum	(30 cuft) per 1 labourer or breaker
39. Breaking of brick ballast 25 mm (1") gauge	0.55 cum	(20 cuft) per 1 labourer or breaker
40. Breaking of stone ballast 40 mm ($1\frac{1}{2}$") gauge	0.40 cum	(15 cuft) per 1 labourer or breaker

LABOUR (MAZDOOR) REQUIRED FOR DIFFERENT WORKS

Extracts from the report on productivity projects in building industries issued by National Building Organisation are given below

(a) Earthwork per 28.30 cum (1000 cuft).

(1) Excavation in foundations, trenches, etc. in ordinary soil including disposal upto 30m (100') and lift of 1.5m (5 ft) - 5 Beldars and 4 Mazdoors can do 28.30 cum (1000 cuft) per day.

(2) Refilling excavated earth in foundations plinth, etc. including consolidation in 15cm (6") layers - 3 Beldars, 2 Mazdoors and ½ Bhisti can do 28.30 cum (1000 cuft) per day

(3) Disposal of surplus earth within a lead of 30m (100') - 1 Mazdoor can do 2.83 cum (100 cuft) per day.

(b) Cement concrete work per 2.83 cu.m (100 cuft) -

Laying cement concrete - 2 Beldars, 3 mazdoor, ¾ Bhisti and ¼ mason can do 2.83 cu.m (100 cuft) per day

(C) R.C.C. work -

(1) Laying reinforced concrete - 3 Beldars, 3 mazdoor, 1½ Bhisti and ½ mason can do 2.83 cuft (100 cuft) per day

(2) Centering and shuttering for flat surfaces - 4 Beldars, and 1 carpenter (II class) can do 9.6 sq.m (96 sqft) per day.

(3) Reinforcement work for R.C.C. - 1 Blacksmith or fitter and 1 Beldar can bend and place in position 1 quintal (2 cwt) of steel per day.

(D) Stonework per 2.83 cum (100 cuft)

Random rubble masonry with blue stone in foundation - 3 masons, 3 Beldar, 2 Mazdoors and ¼ Bhisti can do 2.83 cum (100 cuft) per day.

(E) Brickwork per 2.83 cum (100 cuft) -

First class brickwork in 1:4 cement mortar in superstructure partition walls, junctions of roofs parapet walls, and string course - 2¼ masons, 4½ Mazdoors, and ½ Bhisti can do 2.83 cu.m (100 cuft) per day.

(F) Woodwork -

(1) For the frames of doors and windows - 2 Carpenters and 1 Beldar can work 0.18 cu.mt. (640 cuft) of wood equivalent to 4 door frames 7.5cm x 10cm of 1.2m x 2.1m (3'x4' of 3'-11"x7") size per day

(2) For panelled, glazed, etc. shutters - 15 carpenters and 4 Beldar can make and fix 4 shutter 40cm thick of size 2.00m x 1.15m (1½" thick of size of 6'-9" x 3'-9") per day. Quantity of wood per shutter - 0.075 cu.m i.e 2.66 cuft

(G) Iron work -

(1) Fixing 40mm x 3mm x 38cm ($1\frac{1}{2} \times \frac{1}{8}$" x 15") flat iron holdfasts - 1 Blacksmith (II class) 1 mason, and 1 Beldar can fix 36 holdfasts per day.

(2) Fixing 16mm dia (5/8" dia) M.S. rods - 1 Blacksmith (II class), 2 Carpenters (II class) and 3 Beldar can fix 16.5 m (54 rft) per day.

Scanned by CamScanner

(4) Flooring –
4 cm thick (1½") thick cement concrete flooring of 40 sqm (400 sqft) require – 5 masons, 4 Beldars, 3 Mazdoors and 1 Bhisti per day for mixing, laying and finishing.

(I) Finishing –
(1) plastering with any mortar 12mm (½") thick – 3 masons, 3 Mazdoors and 1 Bhisti can plaster 40 sq.m (400 sqft) per day.
(2) White washing or colour washing (3 coats) – 1 white washer and 1 Mazdoor can do 60 sq.m (600 sq.ft) per day.
(3) Painting two coats such as chocolate, red, grey etc. on wood or steel – 3 painters and 2 Mazdoors can paint 10 sqm (100 sqft) per day.

1 cum. portland cement (ordinary cement) = 1.44 grams i.e. 1 cu.m of portland cement = 1440 kgs
As per IS: 456 one litre (1 cu.decimeter) of portland cement = 1.44 kg
1 cu.m of portland cement = 30 bags for practical purposes.
1 bag cement of 50 kg = $\frac{1}{30}$ cu m = 0.034 cum.
At Rs. 215.00 per bag the cost of 1 cu.m of cement comes to Rs. 6325.00
1 quintal (100 kg) white or stone lime

1. Lime concrete in Foundation with 40mm gauge Brick Ballast unit 1 cu.m.
Take – 10 cum.
(a) With white lime and surkhi 1:2 (proportion – 16:32:100, i.e. 1:2:6 approx)

Particulars	Qntty or Nos.	Rate Rs.	Rate P.	Cost Rs.	Cost P.
Materials –					
Brick ballast I class 40mm gauge	10 cu.m	400.00 cum		4000.00	
white lime slaked	1.6 cu.m.	700.00 cum		1120.00	
surkhi	3.2 cu.m.	350.00 cum		1120.00	
		Total –		6240.00	
Labours –					
Mistri (Head mason)	½ no.	160.00 per day		80.00	
Mason	1 no.	150.00 per day		150.00	
Mazdoor (Beldar)	12 nos.	80.00 per day		960.00	
Boy or women coolie	12 nos.	70.00 per day		840.00	
Bhisti (water-man)	2 nos.	70.00 per day		140.00	
Sundries T. and P. etc. (misc., Petty things)	Lumpsum	45.00 L.S.		45.00	
		Total		2215.00	
		Total of materials & labour =		8455.00	
		Add 1½% water charges		127.00	
		Add 10% contractor profit		845.00	
		Grand Total =		9427.50	

Rate per cum = $\frac{9427.50}{10}$ = Rs. 942.00

Approximate calculation of materials for 100 cum. L.C. 1:2:6 lime = $\frac{150}{1+2+6}$ = 16 cum for 10 cum.
surkhi = 16.6 × 2 = 32.2 cum, Brick ballast = 16.6 × 6 = 99.6 cum.
In practice these are taken as 16 (cum)

(b) With Kankar Lime (35% mortar) – unit 1 cu.m. Take – 10 cu.m.

Particulars	Qntty or Nos.	Rate Rs.	Rate P.	Cost Rs.	Cost P.
Materials –					
Brick ballast I class 40mm gauge	10 cum.	400.00 cum		4000.00	
Kankar lime	3.5 cum	400.00 cum		1400.00	
		Total		5400.00	
Labours					
same as above (item 1-a)				2215.00	
		Total of materials & labour =		7615.00	

Scanned by CamScanner

Add 1½% water charges	114.00
Add 10% contractor's profit	761.50
Grand total:	8490.50

Rate per cum - Rs. 8490.50/10 : 849.00 for 10 cum

1.(i) With Kankar lime and surkhi of 1:1 proportion - 10 cu.m.
Brick ballast 40 mm gauge 10 cum, Kankar lime 2.2 cum and surkhi 2.2 cum. and labour same as above
In place of brick ballast, stone ballast may also be used where stone ballast is cheap, which is usually in hill areas.

2. Lime concrete in Foundation or Floor with 40 mm gauge stone ballast, White Lime and Sand (Proportion 1:2:4) unit 1 cum. Take - 10 cu.m.

Materials –			
stone ballast 40mm gauge (local)	8.8 cu.m	900.00 cum	7920.00
Sand or bajri (local)	4.4 cu.m	400.00 cum	1760.00
white lime slaked	2.2 cu.m	700.00 cum	1540.00
		Total	11220.00
Labour –			2215.00
same as for above (item 1-c)			
Total of materials and labour:			13435.00
Add 1½% water charges			201.00
Add 10% contractors profit			1343.00
Grand total:			14979.50

Rate per cum - Rs. 14979.50/10 = Rs. 1498.00 for 10 cum

Approximate method of calculation of materials for 100 cu.m. L.C. 1:2:4 = Lime = $\frac{1}{1+2+4}$ = 22 cum. sand = 22×2 = 44 cum. stone aggregate = 22×4 = 88 cu.m.
That is for 100, 88:44:22 as stone aggregate : sand : Lime

3. Lime concrete in Terraced Roof with 25mm gauge Brick ballast unit 1 - 1 cu.m. Take - 10 cu.m.
(a) With White lime and surkhi - 1:2 (proportion 18:36:100 i.e. 1:2:5½ approximately

Materials –			
Brick ballast 1 class 25mm gauge	10 cum	450.00 cu.m	4500.00
white lime slaked	1.8 cum	700.00 cu.m	1260.00
surkhi	3.6 cum	350.00 cu.m	1260.00
Molasses (Gur)	12 kg	15.00 kg	180.00
Bael fruit (7 kg) in solution	Lump sum	35.00 L.S.	35.00
		Total	7235.00
Labour –			
Mistri Headmason	½ no.	160.00 per day	80.00
Mason	2 no.	150.00 per day	300.00
Mazdoor (Beldar)	10 nos.	80.00 per day	800.00
Boy or women coolie	25 nos.	70.00 per day	1750.00
Bhisti (water-man)	3 nos.	70.00 per day	210.00
Sundries T. and P. etc	Lump sum	45.00 L.S	45.00
		Total	3185.00
Total of materials and labour			10420.00
Add 1½% water charges			156.30
Add 10% contractor's profit			1042.00
Grand Total			11618.30

Rate per cum - Rs. 11618.80/10 = Rs. 1162.00 for 10 cum

(b) Rate per sq.m. for 10 cm thick L.C. Terracing
1 cu.m for 10 cm thickness cover $\frac{1}{0.1}$ = 10 sqm .. Rate per sq.m $\frac{1162.00}{10}$ = Rs. 116.20
(c) Rate per sqm. for 7.5 cm thick L.C. terracing –
1 cum. for 7.5 cm thickness covers $\frac{1}{0.075}$ = 13⅓ sq.m . Rate per sqm $\frac{1162.00}{13.3}$ = Rs 87.40

Scanned by CamScanner

calculation of materials (approximate)

Lime = $\frac{154}{1+2+5\frac{1}{2}} = \frac{154}{8\frac{1}{2}} = 18.2$ cu.m, surkhi = $18.2 \times 2 = 36.4$ cu.m.

Brick ballast = $18.2 \times 5\frac{1}{2} = 100$ cu.m. Approximately 18:36:100.

8.(b) With kankar lime (1:5 mortar) - unit 1 cum. Take - 10 cu.m

Materials —			
Brick ballast 1st class 25 gauge	10 cum	450.00 (cum)	4500.00
kankar lime	4.5 cum	400.00 cum	1800.00
molasses (Gur)	12 kg	15.00 kg	180.00
Bael fruit (7 kg) in solution	Lumpsum	45.00 L.S	45.00
		Total	6525.00
Labour —			
same as for above (item 3.0)			3185.00
Total materials & labour			9710.00
Add 1½% water charges			145.00
Add 10% contractor's profit			971.00
		Grand Total =	10826.50

Rate per cum = Rs. 10826/10 = Rs. 1083.60 for 10 cu.m

(i) Rate per sqm for 10cm thick I.C. terracing = 1083.60/10 = Rs. 108.30

(ii) Rate per sqm for 7.5cm thick I.C. terracing = 1083.60/13⅓ = Rs. 81.40

Cement Concrete

Sum total quantity of determining the quantity of materials for 10 cum concrete is to divide 15.2 by the sum of the numerals of the proportions of the materials which gives the quantity of cement in cu.m

Illustration — To bend the materials for 10 cu.m. of cement of 1:4:8 proportion

cement = $\frac{15.2}{1+4+8} = \frac{15.2}{13} = 1.17$ cu.m = say 1.15 cum

Therefore, sand = $1.15 \times 4 = 4.60$ cu.m. and ballast = $1.15 \times 8 = 9.20$ cu.m.

Materials required for different proportions of cement concrete — 10 cu.m.

Quantity of materials may be calculated by 15.2 as sum total and dividing by sum of the proportions

Proportion	Ballast	Sand	Cement
1:1½:3	8.40 cum	1.20 cum	2.80 cum (84 bags)
1:2:4	8.80 cum	1.40 cum	2.20 cum (66 bags)
1:3:6	9.00 cum	1.50 cum	1.50 cum (45 bags)
1:4:8	9.20 cum	1.60 cum	1.15 cum (34½ bags)
1:5:10	9.50 cum	1.75 cum	0.95 cum (28½ bags)
1:6:12	9.60 cum	1.80 cum	0.80 cum (24 bags)

5. Cement concrete 1:5:10 in foundation or Floor with Brick ballast 40mm (1½") Thick gauge. -unit 1 cu.m. Take - 10 cum.

Particulars	Qnty or Nos	Rate Rs.	Rate P.	Cost Rs.	Cost P.
Materials —					
Brick ballast 1st class 40mm gauge	9.50 cu.m	400.00 per cu.m.		3800.00	
sand	4.75 cu.m	400.00 per cu.m		1900.00	
cement (28½ bags)	0.95 cu.m	6325.00 per cu.m		6008.75	
		Total =		11708.75	
Labour —					
Mistri (Head mason)	½ no.	160.00 per day		80.00	
Mason	1½ no.	150.00 per day		225.00	
Mazdoor (Beldar)	12 nos.	80.00 per day		960.00	
Boy or Woman cooli & Bhisti including curing	18 nos.	70.00 per day		1260.00	
Sundries & T. and P. etc	4 nos	70.00 per day		280.00	
	Lumpsum	55.00 L.S.		55.00	

Scanned by CamScanner

Total = 2860.00

Total of materials and labour = 14568.75
Add 1½% water charges 218.50
Add 10% contractor's profit 1456.90

Grand Total = 16244.15
Rate per cum - Rs. 16244.15/10 = Rs. 1624.00 for 10 cu.m

6. Cement concrete 1:2:4 - unit 1 cum. Take - 10 cu.m

Materials —			
stone ballast 40mm gauge	8.80 cu.m	900.00 per cum	7920.00
sand (coarse)	4.40 cu.m	700.00 per cu.m	3080.00
cement (66 bags)	2.20 cu.m.	6325.00 per cum	13915.00
		Total =	24915.00
Labour			
Mistri (Head mason)	⅕ nos.	160.00 per day	53.30
Mason	2 nos.	150.00 per day	300.00
Mazdoor (Beldar)	12 nos	80.00 per day	960.00
Boy or women coolie	20 nos.	70.00 per day	1400.00
Bhisti (including curing)	6 nos.	70.00 per day	420.00
Forms etc. (according to requirements)	Lumpsum	600.00 L.S.	600.00
Sundries T and P. etc.	Lumpsum	70.00 L.S	70.00
		Total =	3803.30
Total of materials & labour			28718.30
Add 1½% water charges			430.70
Add 10% contractor's profit			2871.80
Grand Total =			32020.80

Rate per cu.m - Rs. 32020.00/10 = Rs. 3202.00 for 10 cu.m.

7. R.C.C. work in Beams, slabs, etc. 1:2:4 - unit 1 cu.m. Take - 1 cu.m.

Particulars	Quantity nos	Rate Rs. P.	Cost Rs. P.
Materials —			
stone ballast 20mm gauge	0.80 cu.m	1000.00 per cum	8800.00
sand (coarse)	0.40 cu.m	700.00 per cum	3080.00
cement (66 bags)	2.20 cu.m	6325.00 per cum	13915.00
steel, mild steel bars @ 1% = 1 cu.m. @ 78.5 q/cum = 7.85q	7.85q	3000.00 per q	23550.00
Binding wire	1.50kg	40.00 per kg	60.00
		Total	49405.00
Labour —			
Mistri (Head mason)	½ no.	160.00 per day	80.00
Mason	3 no.	150.00 per day	450.00
Mazdoor (Beldar)	12 nos.	80.00 per day	960.00
Boy or woman coolie	20 nos	70.00 per day	1400.00
Bhisti (including curing)	6 nos.	70.00 per day	420.00
sundries T. and P. etc	Lumpsum	60.00 L.S	60.00
		Total	3370.00
Bending, cranking and binding steel bars in position —			
Blacksmith (II class)	8 nos.	150.00 per day	1200.00
Mazdoor (Beldar)	8 nos	80.00 per day	640.00
T. and P.	Lumpsum	30.00 L.S.	30.00
		Total	1870.00
Centering and shuttering (both erection and dismantling) —			
Timber planks and battens	Lumpsum	650.00 L.S.	650.00
carpenter (II class)	10 nos.	150.00 per day	1500.00
Mazdoor (Beldar)	10 nos.	80.00 per day	800.00
Nails	lumpsum	90.00 L.S.	90.00
	Lumpsum	30.00 L.S.	30.00
		Total =	3070.00

Scanned by CamScanner

Total of materials and labour	57715.00
Add 1½% water charges	865.00
Add 10% contractor profit	5771.50
Grand Total =	64352.50 for 10 cu.m.

Rate per cu.m. = Rs. 64352.50/10 = Rs. 6435.00

Brickwork with standard brick – Calculation of materials required for brickwork –

Take a wall 1½ brick 30cm nominal thickness of 20m length and 5m height. Normally volume = 20×0.3×5 = 30 cu.m.

Normally mortar joint will be less than 1cm, taking 1cm mortar joint, the actual thickness of wall be 29cm.

Therefore, actual volume = 20×0.29×5 = 29 cu.m. Number of standard bricks of 20cm×10cm×10cm×nominal size = $\frac{29}{0.20\times0.10\times0.10}$ = 14500 nos.

Therefore, number of bricks per cu.m (nominal) = $\frac{14500}{30}$ = 484 nos. Considering 5% breakage, wastages, etc this may be taken 500 nos per cu.m.

For 10 cu.m of brickwork 5000 bricks are required

Mortar – Mortar requirement = total volume of brickwork minus net volume of bricks = 29 – (0.19×0.09×0.09×14500) = 29 – 22.315 = 6.685 cu.m. For frog filling, for use of cut bricks bonding, for uniform joints, wastages, etc 15% extra mortar may be required. Therefore the volume of mortar = 6.685 + 6.685×0.15 = 7.688 cu.m. For dry volume increase by ¼ dry volume of mortar = 7.688 + 1.922 = 9.61 cu.m.

For 30 cu.m of brickwork, dry volume of mortar = 9.61 cu.m.

For 10 cu.m of brickwork, dry volume of mortar = $9.61\times\frac{10}{30}$ = 3.2 cu.m.

In practice, for cement mortar 3 cu.m dry mortar and lime mortar 3.5 cu.m. of dry mortar are taken for 10 cu.m brickwork. As an example 30% dry mortar may be taken

Calculation of materials of mortar –

Approximate method to determine the quantity of materials of mortar for 10 cu.m. brickwork. Divide 3 by the sum of the numerals of the proportion of materials which gives the quantity of cement in cu.m. As for example for brickwork in 1:6 cement mortar cement = $\frac{3}{1+6}$ = 0.43 cu.m. Therefore sand = 0.43×6 = 2.58 cu.m. But as the cement will go to fill up the voids in sand 0.45 cu.m of cement and 2.7 cu.m. of sand may be taken.

II. I-class Brickwork in Foundation and plinth with 20×10×10cm (nominal size) Bricks with cement sand mortar 1:6 – unit 1 cu.m. Take – 10 cu.m.

Particulars	Quantity or Nos.	Rate Rs.	Rate P.	cost Rs.	cost P.
Materials –					
Brick I-class (500 bricks per cu.m)	5000 nos.	2000.00	per 1000 nos	10000.	00
cement (12.5 bags)	0.45 cu.m	6325.00	per cu.m	2846.	00
sand (local)	2.7 cu.m	400.00	per cu.m	1080.	00
			Total =	13926.	25
Labour –					
Mistri (Head mason)	½ no.	160.00	per day	80.	00
Mason	7 nos.	150.00	per day	1050.	00
Mazdoor (Beldar)	7 nos.	80.00	per day	560.	00
Boyer woman coolie	7 nos.	70.00	per day	490.	00
Bhisti (water man)	2 nos.	70.00	per day	140.	00
Sundries T. and P. etc. (Misc. Petty things)	Lumpsum	35.00	L.S.	35.	00
			Total =	2355.	00
Total of materials and labour				16281.	25
Add 1½% water charges				244.	25
Add 10% contractor profit				1628.	00
Grand Total =				18153.	50

Scanned by CamScanner

15. 1-class Brickwork in superstructure with 20×10×10 cm Brick with 1:6 cement sand Mortar – unit 1 cu.m. Take – 10 cu.m.

Particulars	Qnty or Nos	Rate Rs.	P	Cost Rs.	P.
Materials –					
Brick 1-class (500 bricks per cum)	5000 nos.	2000.00 per 1/nos		10000.00	
cement (13.5 bag)	0.45 cum	6325.00 per cum		2846.25	
sand (Local)	2.7 cu.m	400.00 per cum		1080.00	
		Total		13926.25	
Labour –					
Mistri (Head mason)	½ nos.	160.00 per day		80.00	
Mason	10 nos.	150.00 per day		1500.00	
Mazdoor (Beldar)	7 nos.	80.00 per day		560.00	
Boy or woman coolie	10 nos.	70.00 per day		700.00	
Bhisti	2 nos.	70.00 per day		140.00	
scaffolding	Lumpsum	130.00 L.S		130.00	
Sundries, T and P. etc.	Lumpsum	35.00 L.S.		35.00	
		Total		3145.00	
		Total of materials and labour		17071.25	
Add 1½% water charges				256.00	
Add 10% Contractor profit				1707.00	
		Grand Total =		19034.25	

Rate per cum – Rs. 19034.25/10 = Rs. 1903.00 for 10 cum

15 Half Brickwall (10cm thick partition wall) with 1:3 cement mortar – unit 1 sq.m – Take – 100 sq.m

100 sq.m. wall of 10 cm thickness = 10 cum. hence quantity of materials may be calculated as usual

Particulars	Qnty or Nos	Rate Rs.	P	Cost Rs.	P.
Materials –					
Brick 1-class (500 nos. per cu.m)	5000 nos.	2000.00 per 1/nos		10000.00	
cement (22½ bags)	0.75 cum	6325.00 per cum		4743.75	
sand coarse	2.25 cum	700.00 per cum		1575.00	
Mild steel bars 6mm dia. every 4th layer or hoop iron	40 kg	30.00 per kg		1200.00	
		Total		17518.75	
Labour:					
Mistri (Head mason)	½ no.	160.00 per day		80.00	
Mason	12 nos.	150.00 per day		1800.00	
Mazdoor (Beldar)	8 nos.	80.00 per day		640.00	
Boy or woman coolie	10 nos.	70.00 per day		700.00	
Bhisti	2 nos.	70.00 per day		140.00	
scaffolding	Lumpsum	160.00 L.S		160.00	
Sundries T. and P. etc.	Lumpsum	35.00 L.S.		35.00	
		Total		3555.00	
		Total materials & labour		21073.75	
Add 1½% water charges				316.00	
Add 10% Contractor profit				2107.25	
		Grand Total:		23497.00	

Scanned by CamScanner

19. 2nd class Brickwork in Mud Mortar in Superstructure - unit 1 cu.m. Take-10 cum

Materials –			
Brick 2nd class	5000 nos.	2000.00 per 1000 nos	10000.00
Earth (loamy soil) including wastage	~~5.00 cu.m~~ 5.00 cu.m	15.00 per cu.m	75.00
		Total =	10075.00
Labour etc. –			
Mistri (Head mason)	½ no.	160.00 per day	40.00
Mason	8 nos.	150.00 per day	1200.00
Mazdoor (Beldar)	6 nos.	80.00 per day	480.00
Boy or woman coolie	6 nos.	70.00 per day	420.00
Bhisti	1 no.	70.00 per day	70.00
Scaffolding	Lumpsum	140.00 L.S.	140.00
Sundries T. and P. etc.	Lumpsum	35.00 L.S.	35.00
		Total =	2385.00

Total of materials and labour = 12460.00
Add 1½% ~~wastag~~ water charges. 187.00
Add 10% contractor's profit 1246.00
Grand Total = 13893.00 for 10 cu.m.

Rate per cum – Rs. 13893.00/10 = Rs. 1389.00

23. Coursed Rubble stone masonry in superstructure in 1:6 Cement Sand Mortar – unit 1 cu.m. Take - 10 cu.m.

Particulars	Qnty or Nos.	Rate Rs.	Rate P.	Cost Rs	Cost P.
Materials –					
stone including through bond stone and wastage	12.50 cum	500.00	per cum	6250.00	
cement (18 bags)	0.60 cum	6325.00	per cum	3795.00	
sand or bajri (local)	3.60 cum	400.00	per cum	1440.00	
		Total		11485.00	
Labour, etc. –					
Mistri (Head mason)	½ no.	160.00	per day	80.00	
Mason	16 nos.	150.00	per day	2400.00	
Mazdoor (Beldar)	16 nos.	80.00	per day	1280.00	
coolie (boy or woman)	8 nos.	70.00	per day	560.00	
Bhisti	1½ nos.	70.00	per day	105.00	
scaffolding	Lumpsum	160.00	L.S.	160.00	
Sundries T. and P. etc.	Lumpsum	35.00	L.S.	35.00	
		Total		4620.00	
Total of materials and labour				16105.00	
Add 10% contractor's profit				1610.50	
Grand Total				17715.50	

Rate per cum – Rs. 17715.50/10 = Rs. 1771.00 for 10 cu.m

Scanned by CamScanner

PLASTERING

Calculation of quantity of mortar and materials –

Area x thickness gives the quantity of mortar for uniform thickness for filling up the joints and to make up uniform surface of wall, this may be increased by 30% which will give wet mixed mortar. To get the total dry volume of ingredient materials or mortar the wet volume may be further increased by 25% The quantity of each material of the mortar may be found by usual methods. dividing the dry volume of mortar by the sum of the numerals of the proportion and multiplying by the individual numerals.

Materials for 12mm thick plastering in wall for 100 sq.m –

Wet mixed mortar for uniform layer = 1.2 cu.m. Adding 30% to fill up joints, uneven surfaces, etc. the quantity of mortar comes to 1.2 to 1.36 – 1.56 cu.m. Increasing by 25% the total dry volume = 1.95 cu.m = 2.00 cu.m (say). For 1:6 cement sand mortar. Cement = $\frac{2}{1+6}$ = 0.30 cu.m. sand = 0.30 x 6 = 1.80 cu.m. Similarly, the quantities of materials for other proportions may be calculated. The quantities of materials for different proportions are given in the following page.

Materials for 20mm thick plastering in wall for 100 sq.m –

As the thickness of plaster is more, 20% of mortar may be taken to fill up the joints, unevenness, etc. The quantity of wet mortar is equal to 200 x 0.02 + 20% = 2.00 + 0.40 = 2.40 cu.m. Increasing 25% the dry volume: 2.40 + 0.60 = 3.00 cum. The quantities of each material of mortar may be found by usual method.

Rich Mortar – For rich mortar plastering, the quantities of materials will be less as the cement will be in excess than the voids in sand and the reduction in volume of dry mortar will be less.

Ceiling plastering 12mm thick for 100 sq.m – For plastering in R.C.C. ceiling the unevenness of surface will be less and 20% extra mortar may be taken to get ~~unevenness~~ even surface. The quantity of wet mortar is equal to ~~100~~ 100 x 0.012 + 20% = 1.2 + 0.24 = 1.44 cu.m. Increasing by 25% the dry volume = 1.44 + 0.36 = 1.80 cu.m.

For 6mm thick plastering R.C.C. ceiling the quantity of dry mortar may be taken as 1.00 cu.m.

For plastering in floor over lime concrete the same quantity of mortar as for wall may be taken as there will be sufficient unevenness in the surface of lime concrete.

Neat cement flooring – For neat cement finishing in floor or dado or skirting, the thickness of neat cement layer may be taken as 1.5mm ($\frac{1}{16}$) thick, therefore, the cement paste requirement for 100 sqm = 100 x 0.0015 = 0.15 cu.m. Dry volume of cement increased by 25% = 0.15 + 0.15 x 1/4 = 0.19 cu.m = 2 cu.m (say) = 6 bag per 100 sq.m.

Scanned by CamScanner

Materials required for plastering with different mortars of various proportions for 100 sq.m —

For 12mm thick plastering, total dry volume 2 cu.m —

Mortar	Proportion	Cement	Sand
(i) Cement mortar	1:2	0.60 cum (18 bag)	1.20 cum
(ii) Cement mortar	1:3	0.45 cum (13½ bag)	1.35 cum
(iii) Cement mortar	1:4	0.40 cum (12 bag)	1.60 cum
(iv) Cement mortar	1:5	0.35 cum (10½ bag)	1.75 cum
(v) Cement mortar	1:6	0.30 cu.m (9 bag)	1.80 cum
(vi) Kankar lime	- - -	1.80 cum kankar lime	
(vii) White lime and surkhi or sand	1:1	1.00 cu.m White lime & surkhi or sand	1.00 cu.m
(viii) White lime and surkhi on sand	1:2	0.70 cum white lime and surkhi on sand	1.40 cu.m
(ix) Cement, white lime and sand	1:1:6	0.30 cum cement, 0.30 cu.m lime and	1.80 cu.m sand

For 20mm thick plastering total dry volume 3 cu.m

(i) Cement mortar	1:2	1.00 cum (30 bags)	2.00 cu.m
(ii) Cement mortar	1:3	0.78 cum (23.4 bag)	2.34 cu.m
(iii) Cement mortar	1:4	0.65 cum (19½ bags)	2.60 cu.m
(iv) Cement mortar	1:5	0.54 cum (16.2 bags)	2.70 cu.m
(v) Cement mortar	1:6	0.46 cum (13.8 bags)	2.76 cu.m

28. 12mm plastering 1:6 — unit 1 sq.m. Take = 100 sq.m

Particulars	Qnty or Nos	Rate Rs. P.	Cost Rs. P.
Materials —			
cement (a bags)	0.30 cu.m.	6325.00 per cum	1897.50
sand (loca)	1.80 cu.m	400.00 per cum	720.00
		Total	2617.50
Labour, etc			
Mistri (Head mason)	⅓ no.	160.00 per day	53.30
Mason	10 nos.	150.00 per day	1500.00
Mazdoor (Beldar) including raking of joints	15 nos.	80.00 per day	1200.00
Bhisti including curing)	¾ nos.	70.00 per day	52.50
Scaffolding sundries T. and P. etc	Lumpsum	90.00 L.S	90.00
		Total =	2895.80
Total of materials and labour			5513.30
Add 1½% water charges			82.70
Add 10% contractor profit			551.30
		Grand Total	6147.30 for 100 sq.m

Rate per sqm — Rs. 6147.30/10 = Rs. 61.50

30. 12mm thick plastering 1:3 cement coarse and mortar — surface neat cement finished in dado — unit 1 sq.m. Take — 100 sq.m.

Materials

cement (13½ bags)	0.45 cum
sand coarse	1.35 cu.m
cement for surface finishing (6 bags)	0.20 cu.m

Labour —

Mistri (Headmason) ⅓ nos.
Mason — 12 nos.
Mazdoor (Beldar) — 15 nos.
Bhisti — 1 no.
Sundries T. and P. etc — 30 %

Add 1½% water charges and 10% contractor's profit over total cost

Scanned by CamScanner

Cement Concrete floor

The quantity of cement concrete may be calculated by multiplying area of floor thickness and the quantity of each material may be found on the same principle as for cement concrete.

For 25 cm c.c. floor for 100 sq.m. of area the quantity of cement concrete = 100 × 0.025 = 2.5 cu.m. Adding 10% extra for unevenness of base concrete, the quantity comes to 2.5 + 0.25 = 2.75 cu.m.

For 100 cu.m cement concrete the total dry volume of materials is 125, i.e. approximately 50% more.

For 2.5 cm thick c.c. floor of 1:2:4 proportion, for 100 sqm total dry volume of materials = 2.75 + 50% = 2.75 + 1.375 = 4.125 cu.m. Therefore, cement = $\frac{4.125}{1+2+4} = \frac{4.125}{7}$ = 0.59 cu.m. = 0.60 cum (18 bags), sand = 0.6 × 2 = 1.20 cum and stone aggregate = 0.6 × 4 = 2.40 cu.m. For neat cement surface finishing additional 0.2 cum (6 bags) of cement will be required.

For 2 cm thick c.c. floor of 1:1½:3 proportion for 100 sq.m. the dry volume of materials as above is equal to 4.125 cu.m. Therefore, cement = $\frac{4.125}{1+1\frac{1}{2}+3}$ = $\frac{4.125}{5\frac{1}{2}}$ = 0.75 cum = 22.5 bags, quantity of sand = 0.75 × 1½ = 1.125 cu.m, and the quantity of stone aggregate = 0.75 × 3 = 2.25 cum. For neat cement finishing add extra cement of 0.2 cum (6 bags)

For 4 cm thick c.c. 1:2:4 floor 100 sq.m., total dry volume of concrete = 100 × 0.04 + 10% (for unevenness) + 50% increases for dry volume = 4.4 + 2.2 = 6.6 cu.m. Therefore, cement = $\frac{6.6}{1+2+4}$ = 0.94 cu.m (28.2 bags), sand = 0.94 × 2 = 1.88 cum and stone aggregate = 0.94 × 4 = 3.76 cum. For neat cement finishing add extra cement of 0.2 cum (6 bags)

For coloured cement floors, mix pigment colour with neat surface cement in the proportion of 1:3 to 1:6 (colour: cement) to have the desired colour. White cement mixed with colour pigment of the desired proportion may also be used, but for strength it is better to ordinary portland cement is mixed with white cement in the proportion of 1:1 to 1:3 (grey portland cement : white cement) and then to add colour pigment to have the desired colour.

When colour pigement is mixed with white cement, the requirement of colour pigment is much less, may be 1:5 to 1:10 (pigment: white cement)

33. 2.5 cm Cement Concrete Floor 1:2:4 unit 1 sq.m. Take - 100 sq.m

Particulars	Qnty or Nos	Rate Rs. P.	Cost Rs. P.
Materials -			
stone ballast 20mm gauge (stone grit)	2.40 cu.m	1000.00 per cu.m	2400.00
sand (coarse)	1.20 cum	700.00 per cum	840.00
cement (18 bags)	0.60 cum	6325.00 per cu.m	3795.00
cement for surface finishing (6 bags)	0.20 cum	6325.00 per cum	1265.00
		Total =	8300.00
Labour etc -			
Mistri (Head mason)	½ no.	160.00 per day	120.00
Mason	10 nos.	150.00 per day	1500.00
Mazdoor (Beldar)	5 nos.	80.00 per day	400.00
Boy or woman coolie	5 nos.	70.00 per day	350.00
Bhisti (including curing)	2 nos.	70.00 per day	140.00
side forms	lumpsum	90.00 L.S.	90.00
sundries T. and P. etc.	lumpsum	35.00 L.S	35.00

Scanned by CamScanner

Total = 2635.00

Total of materials and labour = 10935.00
Add 1½% water charges 164.00
Add 10% contractor's profit 1093.50

Grand Total = 12192.50
Rate per sqm – Rs. 12192.50/100 = Rs. 122/- for 100 sq.m.

39. 2.5 cm Cement Concrete floor 1:1½:3 unit 1 sq.m. Take – 100 sq.m.

Particulars	Qnty or Nos.	Rate Rs.	Rate P.	Cost Rs	Cost P.
Materials					
stone aggregate (grit) 20mm gauge	2.25 cum	1000.00	per cum	2250.00	
sand (coarse)	1.125 cum	700.00	per cum	787.50	
cement (21 bag)	0.75 cum	6325.00	per cum	4743.75	
cement for surface finishing (6 bags)	0.20 cum	6325.00	per cum	1265.00	
		Total		9046.25	
Labour – same as for item 32				2635.00	

Total of material and labour 11681.25
Add 1½% water charges 175.20
Add 10% contractor's profit 1168.10

Grand Total = 13024.55
Rate per sqm – Rs. 13024.55/100 = Rs. 130.00 for 100 sq.m

36. 7.5 cm thick lime concrete in floor – 1 sq.m. Take – 100 sq.m
with white lime and Surkhi or sand 1:2 Quantity of L.C. = 100 × 0.075 = 7.5 cum
Quantity of materials may be calculated proportionately ¾ of the quantity of 10 cu.m. from item 1 of page 25

Particulars	Qnty or Nos.	Rate Rs.	Rate P.	Cost Rs	Cost P.
Materials –					
Brick ballast 1-class 40mm gauge	7.50 cum	400.00	per cum	3000.00	
white lime slaked	1.20 cum	700.00	per cum	840.00	
Surkhi (or sand)	2.40 cum	350.00	per cum	840.00	
		Total		4680.00	
Labour, etc –					
Mistri (Head mason)	½ no.	160.00	per day	80.00	
Mason	1 no.	150.00	per day	150.00	
Mazdoor (Beldar)	10 nos.	80.00	per day	800.00	
Boy or woman coolie	10 nos.	70.00	per day	700.00	
Bhisti	1 no.	70.00	per day	70.00	
Sundries T and P, etc.	Lump sum	35.00	L.S.	35.00	
		Total		1835.00	

Total of materials and labour 6515.00
Add 1½% water charges 97.75
Add 10% contractor's profit 651.50

Grand Total 7264.25
Rate per sqm – Rs. 7264.25/100 = Rs. 72.50 for 100 sq.m

Scanned by CamScanner

Calculation of materials for Mosaic Terrazo Floor for 100 sq.m —

20mm thick C.C. 1:2:4 - Volume of C.C - 100 × 0.02 + 10% for uneven and rough base = 2.00 + 0.20 = 2.20 cu.m. Dry volume = 2.2 + 50% = 2.2 + 1.1 = 3.3 cu.m. cement = $\frac{3.3}{1+2+4}$ = 0.47 cu.m. (14.1 bags)

sand = 0.47 × 2 = 0.94 cu.m.

stone chips = 0.47 × 4 = 1.88 cu.m.

6 mm Mosaic layer 1:1½ = Volume of mosaic concrete = 100 × 0.006 + 20% for surface cutting by rubbing = 0.60 + 0.12 = 0.72 cu.m.

Dry volume = 0.72 + 50% = 0.72 + 0.36 = 1.08 cu.m

cement = $\frac{1.08}{1+1\frac{1}{2}} = \frac{1.08}{2\frac{1}{2}}$ = 0.4 cum (12 bags)

Marble chips = 0.4 × 1½ = 0.60 cu.m

Materials for mosaic layers for different proportion —

(i) Proportion 1:1 - Cement : 0.50 cum (15 bags), Marble chips = 0.5 cu.m.

(ii) Proportion 1:1½ cement = 0.40 cum (12 bags), marble chips = 0.6 cu.m.

(iii) Proportion 1:2 - Cement = 0.36 cum (10.8 bag), Marble chips = 0.72 cu.m

(iv) To get whitish base (ground) 10% to 20% of marble dust may be mixed with portland cement.

Mosaic Dado or skirting - 6 mm thick mosaic layer over 20mm thick cement plaster 1:3 cement : coarse sand. Materials for cement mortar same as in para 49c. Materials for mosaic layer to be same as above. Labour may be increased by 10% over [illegible]

49. Mosaic or Terrazo Tile Floor - unit 1 sq.m. Take - 100 sq.m.

Particulars	Qnty or Nos.	Rate Rs. P.	Cost Rs. P.
Materials-			
Mosaic Tiles 20cm × 20cm nominal size 2500 nos.	100 sq.m	300.00 per cum	30000.00
20mm lime mortar — white lime (slaked)	1 cum	700.00 per cu.m	700.00
surkhi	2 cum	350.00 per cu.m	700.00
cement (for neat cement paste or grout for laying tiles and for joints 6 bags	0.20 cum	6325.00 per cum	1265.00
		Total	32665.00
Labour etc.			
Mistri (Headmason)	1 no.	160.00 per day	160.00
Mason (Specialist)	15 nos.	150.00 per day	2250.00
Mazdoor (Beldar)	15 nos	80.00 per day	1200.00
Bhisti	1½ nos.	70.00 per day	105.00
Polishers	120 nos.	70.00 per day	8400.00
Polishing stone	L.S.	450.00 L.S.	450.00
Oxalic acid powder	L.S.	90.00 L.S.	90.00
Sundries T. and P. etc.	L.S	90.00 L.S.	90.00
		Total	12745.00
		Total of materials and labour	45410.00
		Add 1½% water charges	681.00
		Add 10% Contractor's Profit	4541.00
		Grand Total =	50832.00

Rate per sq.m — Rs. 50832.00/100 = Rs. 506.00 for 100 sq.m

Scanned by CamScanner

Brick Floor 10cm thick surface pointed with cement mortar —

Requirement of materials for 100 sq.m. — Brick floor 10 cm thick 1 sqm is equal to $100 \times 0.10 = 10$ cum. Hence materials requirement is same as for 10 cum. brickwork, but 10% excess mortar may be taken for unevenness of base. For pointing 0.6 cum total dry mortar is required. For brick floor laid with 1:6 cement mortar, the quantity of materials are - Brick = 5000 nos, cement = 0.5 cum (15 bags) and sand = 3.0 cum. For pointing 1:2 - cement = 0.2 cum (6 bags) and sand = 0.4 cum are required. Similarly, materials for other proportions may be calculated.

42. Brick Floor 10 cm thick cement pointed — unit 1 sqm. Take - 100 sq.m

(a) Brick laid 1:6 mortar, surface pointed 1:2 cement mortar.

Particulars	Qnty or Nos	Rate Rs.	P.	Cost Rs.	P.
Brickwork —					
Materials for brick laying —					
Brick I-class	5000 nos.	2000.00 per cum		10000.00	
cement (15 bags)	0.50 cum	6325.00 per cum		3162.50	
sand local	3.00 cum	400.00 per cum		1200.00	
		Total =		14362.50	
Labour of bricklaying —					
Mistri (Head mason)	½ no.	160.00 per day		80.00	
Mason	10 nos.	150.00 per day		1500.00	
Mazdoor (Beldar)	8 nos.	80.00 per day		640.00	
Boy or woman coolie	6 nos.	70.00 per day		420.00	
Bhisti	1 nos.	70.00 per day		70.00	
sundries, T. and P. etc.	Lumpsum	35.00 L.S.		35.00	
		Total		2745.00	
cement pointing —					
Materials —					
cement (6 bags)	0.20 cum	6325.00 per cum		1265.00	
sand (local)	0.40 cum	400.00 per cum		160.00	
		Total =		1425.00	
Labour, etc. —					
Mistri (Head mason)	⅓ no.	160.00 per day		53.30	
Mason	10 nos.	150.00 per day		1500.00	
Mazdoor (Beldar)	10 nos.	80.00 per day		800.00	
Bhisti	½ no.	70.00 per day		35.00	
scaffolding, sundries T and P. etc	Lumpsum	55.00 L.S.		55.00	
		Total		2443.00	
		Total of materials and labour		3868.00	
Grand Total				20975.50	
Add 15% water charges.				3147.00	
Add 10% contractor's profit				2097.50	
				Rs. 21387.60	for 100 sq.m.

Rate per sq.m — Rs. 28387.60/100 = Rs. 284.00

Scanned by CamScanner

55. (i) white washing one coat – unit 1 sq.m. Take – 100 sq.m.

Particulars	Quty or Nos.	Rate Rs.	Rate P.	Cost Rs.	Cost P.
Materials –					
white lime unslaked @ 400.00 per cu.m	10 kg	4.00 per kg		40.00	
Glue powder	Lump sum	5.00 L.S.		5.00	
surkhi (or sand)	Lumpsum	5.00 L.S.		5.00	
		Total		50.00	
Labour –					
white washer	2/3 no.	100.00 per day		66.70	
Boy coolie	2/3 no.	70.00 per day		16.70	
Sundries, T. and P. etc	Lumpsum	5.00 L.S.		5.00	
		Total		118.40	
		Total materials & labour		168.40	
		Add 10% contractor's profit		16.80	
		Grand Total:		185.20	for 100 sq.m

Rate per sq.m – Rs. 185.20/100 = Rs. 1.85

56. 2cm Thick Damp proof course (D.P.C) with cement mortar 1:2 · unit 1 sqm. Take-100 sq.m.

Particulars	Qnty or Nos	Rate Rs.	Rate P.	Cost Rs.	Cost P.
Materials –					
cement (27 bags)	0.90 cu.m.	6325.00 per cum		5692.50	
Sand (coarse)	1.80 cum.	700.00 per cum		1260.00	
cem-seal or Impermo (1kg. per bag of cement)	27.00 kg.	40.00 per kg		1080.00	
		Total		8032.00	
Labour, etc. –					
Mistri (Headmason)	½ no.	160.00 per day		80.00	
Mason	5 nos.	150.00 per day		750.00	
Mazdoor (Beldar)	5 nos.	80.00 per day		400.00	
Bhisti (including curing)	1 no.	70.00 per day		70.00	
Form insides	Lumpsum	90.00 L.S.		90.00	
Sundries T. and P. etc.	Lumpsum	35.00 L.S.		35.00	
		Total		1425.00	
		Total of materials & labour =		9457.00	
		Add 1½% water charges		141.90	
		Add 10% Contractor's profit		945.75	
		Grand Total:		10545.15	for 100 sq.m

Rate per sq.m – Rs. 10545.10/100 = Rs. 105.00

Scanned by CamScanner

77. Asbestos cement sheet ceiling 6mm thick, with 40mm × 20mm teak wood of beading (Excluding Frame) — unit 1 sqm. Take a room 1.50m × 6.30m Area = 28.35 sq.m.

Materials –			
Asbestos cement sheet plain 6mm thick including 5% wastages = 28.35 + 1.42 = 29.77 sq.m	29.77 sqm	100.00 sqm	2977.00
Teak wood beading assuming 90cm × 90cm panels = [(8 nos. × 1.5 + 6 nos × 6.30) × 0.04 × 0.02] + 10% wastages = 0.065 cum	0.065 cum	3000.00 cum	1950.00
Screw 50mm	200 nos.	60.00 per kg	120.00
Screw 60mm	450 nos.	60.00 per kg	270.00
Nails 50mm	1 kg.	30.00/kg	30.00
Labour, etc			
Mistri (Head mason)	1/6 no.	160.00 per day	26.70
Carpenter	2 nos.	120.00 per day	240.00
Mazdoor (Beldar)	2 nos.	80.00 per day	160.00
Scaffolding	Lumpsum	75.00 L.S.	75.00
Sundries, T. and P. etc	Lumpsum	30.00 L.S	30.00
		Total of materials & labour =	~~5878.70~~ 5887.90
Add 10% Contractor's profit			
		Grand Total	6466.60 for 28.35 sqm

Rate per sq.m – Rs. 6466.60/28.35 = Rs. 228.00

64. Wood-work in chaukhat or Frame – Wrought, Framed and Fixed – unit 1 cum.

Salwood work –

Take a frame or chaukhat of 200 × 120 cm door without sill of 8 × 12 cm of salwood

Materials –			
Timber 5.48 × 0.08 × 0.12 (L = 2 × 2.14 + 1 × 1.2 = 5.48)	0.053 cum.		
Wastage 5%	0.003 cum.		
	0.056 cum	25000.00 per cum	1400.00
Labour, etc.			
Mistri (carpenter)	1/16 no.	180.00 per day	11.25
Carpenter	3/4 no.	120.00 per day	90.00
Coolie (Helper)	1/2 no.	70.00 per day	35.00
Sundries, T. and P. etc.	Lumpsum	15.00 L.S.	15.00
		Total of labour	151.25
		Total of materials and labour	1551.25
Add 10% Contractor's profit			155.10
		Grand Total	1706.35

Rate per cum (dividing by 0.053) – Rs. 1706.35/0.053 = Rs. 32195.00

Scanned by CamScanner

66. 4mm Thick panelled Door of Indian Teak Wood — unit 1 sq.m.
Take a window shutter 100×150cm (shutter only). Area = 1.5 sqm. (Pg 11.1)

Particulars	No.	L m	B m	Thickness m	Quantity or nos	Rate Rs.	Rate P.	Cost Rs	Cost P.
Materials —									
Timber									
stiles	4	1.50	0.075	0.04	0.024				
	2	1.00	0.075	0.04					
Sash bars verticles (15mm insertion) L = 150 − (2×7.5) + (2×1.5) = 138cm = 1.38m	2	1.38	0.04	0.04	0.008				
Sash bars horizontal (15mm insertion) = 50 − (2×7.5) + (2×1.5) = 38cm = 0.38	6	0.38	0.04	0.04	0.003				
Add 5% for wastage					0.035				
					0.002				
					0.037 cum	35000.00		1295.00	
Brass fittings —									
Fittings —									
Tower bolt 30cm (upper)					1 no	70.00 each		70.00	
Tower bolt 15cm (lower)					1 no.	40.00 each		40.00	
Hinges 10cm					4 nos.	6.00 each		24.00	
Brass handle					1 no.	35.00 each		35.00	
wooden cleat					2 nos.	4.00 each		8.00	
Hinges 2.5cm (for wooden cleat)					2 nos.	3.00 each		6.00	
screws 40mm					20 nos.	50.00 per 1 nos		10.00	
screws 20mm					50 nos.	25.00 per 1 nos		12.50	
Glasspans 16 nos × 18.5 × 33.75 cm = 1.00 sqm Breadth = ½[150 − (2×7.5) − 1 + (2×1.5)] = (3×18.5 cm)					1.00 sqm	300.00 per sqm		300.00	
Ht. = ¼[150 − (2×7.5) − (3×18.5 cm) + (2×1.5)] = 33.75cm									
putty and nails for fixing panes					Lumpsum	25.00 per sqm		25.00	
						Total		1225.50	
Labour, etc —									
Mistri (Carpenter)					1/15 no.	180.00 per day		12.00	
Carpenter					2 nos.	120.00 per day		240.00	
cookie (helper)					1 no.	70.00 per day		70.00	
putty, glue, etc.					Lumpsum	20.00 L.S.		20.00	
Sundries T. and P. etc.					Lumpsum	15.00 L.S.		15.00	
						Total		357.00	
Total of materials and labour								2132.50	
Add 10% contractor's profit								213.25	
							Grand Total =	2400.75	
								for 1.5 sq.m	

Rate per sqm — Rs. 2400.75/1.5 = Rs. 1600.00

Scanned by CamScanner

Lead and Lift:- Normally earthwork is estimated for 30 m lead for distance and 1.5m lift for height or depth, and this distance of 30m and the height of 1.5m are known as normal lead and lift. Normal rate for earthwork is for 30m lead and 1.5m lift. For greater lead or lift the rates will be different for every unit of 30m lead and for every unit of 1.5m lift. The earthwork is, therefore, estimated separately for every 30m lead and for every 1.5m lift.

For the calculation of earthwork in a road longitudinal section and cross-section of the ground are taken and the formation line is fixed. The formation line is fixed in consideration of bleed level, gradient, height of bank, depth of cutting, etc. In plain countries road is usually in banking, but if the road is in cutting for same length and in banking for some other length, the excavated earth from the cutting portion should be utilised for the banking portion within economical limits during the execution of the work. But for estimating of earthwork this point of utilising excavated earth from cutting in certain length in banking of the adjacent may not be taken into account to avoid complicacy. In hilly countries road is usually both in banking and in cutting and the excavated earth from cutting is utilised for banking within economical limits.

Calculation of lead & lift:

Cross-section of earthwork of road in banking or in cutting is usually in the form of trapezium, and the quantity of earthwork may be calculated by the following methods:-

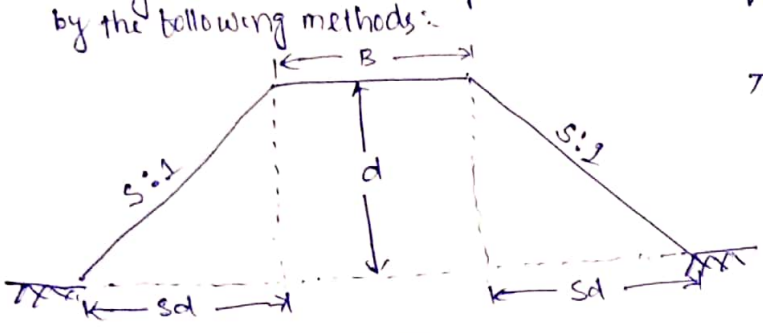

Banking

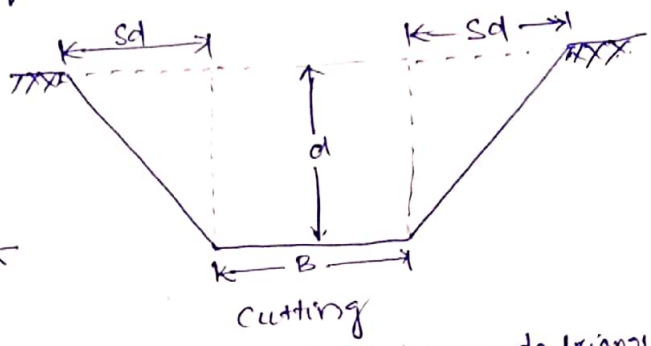

Cutting

Sectional area = Area of central rectangular portion + Area of two side triangular portions.

$= Bd + 2(\frac{1}{2}sd \times d) = Bd + sd^2$

S:1 is the ratio of side slopes as horizontal : vertical. For 1 vertical, horizontal is s for d vertical, horizontal is sd.

Quantity $= (Bd + sd^2) \times L$

When the ground is in a longitudinal slope, the height of bank or the depth of cutting will be different at the two ends of the section, and mean height or depth may be taken for "d" and sectional area at mid-section is taken out for mean height. Alternatively, sectional area at the two ends may be calculated and the mean of two sectional area is taken out. Sectional area at the mid-section or the mean sectional area, multiplied by the length gives the quantity.

Mean height $= \frac{d_1 + d_2}{2}$

Different kinds of soil as sandy, clayey, rocky etc. estimated separately as the rates vary.

Quantity of earthwork may be calculated by the various methods of measurement out of which three methods are given

Method 1. Mid-Sectional Area Method: Quantity = Area of mid-section × length. Let d_1 and d_2 be the height of bank at two ends portion of embankment, L the length of the section, B the formation width and S:1 (horizontal : vertical) the side slope, then

Scanned by CamScanner

Area of mid section = Area of rectangular portion + area of two triangular portion,

$\therefore Bd_m + \frac{1}{2}sd_m^2 + \frac{1}{2}sd_m^2 = Bd_m + sd_m^2$

$\therefore$ Quantity of earthwork $= (Bd_m + sd_m^2) \times L$

General, $Q = (Bd + sd^2) \times L$, where d stands for mean height or depth,

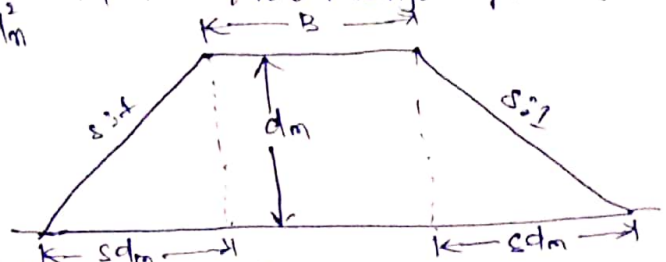

The quantities of earthwork may be calculated in a tabular form as below:

Station or chainage	Depth or Height	Mean Depth or Height d	Area of central portion Bd	Area of side sd^2	Total sectional Area $Bd+sd^2$	Length between stations L	Quantity $(Bd+sd^2) \times L$	
							Embankment	Cutting

Area of side sloping surface —

The area of sides which may require turfing or pitching, may be found by multiplying the mean sloping breadth by the length.

The mean sloping breadth $= \sqrt{(sd)^2 + d^2} = \sqrt{s^2+1}$, where d stands for mean d.

Area of both side slopes $= 2L \times d\sqrt{s^2}$

This also may be calculated in a tabular form —

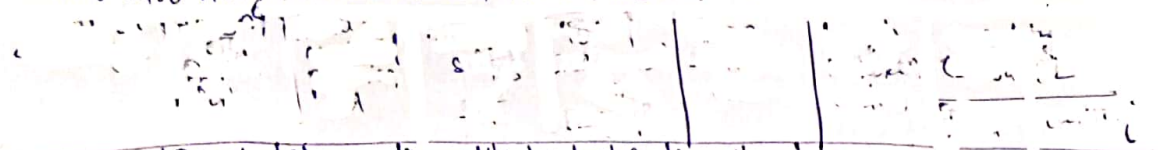

Station or chainage	Depth or Height	Mean depth or Height	Breadth of side slopes $d\sqrt{s^2+1}$ sloping breadth	Length between stations L	Total Area of both side slopes $2Ld\sqrt{s^2+1}$

Method. II - Mean Sectional Area Method:

Quantity = Mean sectional area × length,

Sectional area at one end $A_1 = Bd_1 + sd_1^2$ sectional area at the other end

$A_2 = Bd_2 + sd_2^2$, d_1 and d_2 are the heights or depths at the two ends.

The mean sectional area $A = \frac{A_1 + A_2}{2}$, Quantity $Q = \frac{A_1 + A_2}{2} \times$ Length.

The quantities of earthwork may be calculated in a tabular form as given below:

Stations or chainage	Height or Depth d	Area of central portion Bd	Area of side sd^2	Total sectional Area $Bd+sd^2$	Mean sectional Area	Length between stations L	Quantity $(Bd+sd^2) \times L$	
							Embankment	Cutting

Method. III Prismoidal formula method: Quantity or volume $= \frac{L}{6}(A_1 + A_2 + 4A_m)$

Where A_1 and A_2 are the cross-sectional areas at the two ends of a portion of embankment of a road of length L, and A_m is the mid-sectional area.

Let d_1 and d_2 be the heights of banks at the two ends, and d_m be the mean height at the mid section, B be the formation width and s:1 be the side slope,

Cross sectional area at one end — $A_1 = Bd_1 + sd_1^2$

Scanned by CamScanner

cross sectional area at one end –

$A_1 = Bd_1 + sd_1^2$

cross-sectional area at other end –

$A_2 = Bd_2 + sd_2^2$

cross-sectional area at middle –

$d_m = \frac{d_1+d_2}{2}$

$A_m = Bd_m + sd_m^2$

$= B\left(\frac{d_1+d_2}{2}\right) + s\left(\frac{d_1+d_2}{2}\right)^2$

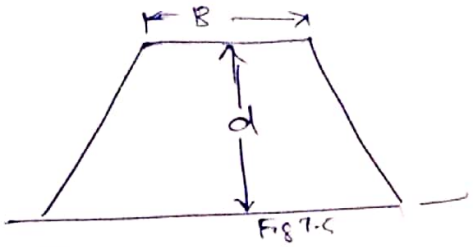

Fig 7.5

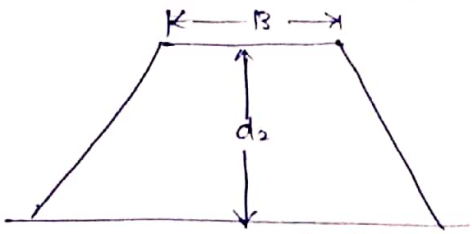

Fig 7.6

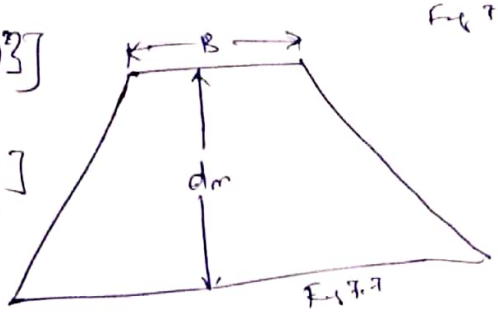

Fig 7.7

Quantity $= \frac{L}{6}(A_1 + A_2 + 4A_m)$

$= \frac{L}{6}\left[(Bd_1 + sd_1^2) + (Bd_2 + sd_2^2) + 4\left\{B\left(\frac{d_1+d_2}{2}\right) + s\left(\frac{d_1+d_2}{2}\right)^2\right\}\right]$

$= \frac{L}{6}\left[(Bd_1 + Bd_2 + 4\frac{Bd_1}{2} + 4\frac{Bd_2}{2}) + sd_1^2 + sd_2^2 + 4s\frac{d_1^2+d_2^2+2d_1d_2}{4}\right]$

$= \frac{L}{6}\left[3Bd_1 + 3Bd_2 + 2sd_1^2 + 2sd_2^2 + 2sd_1d_2\right]$

$= \frac{3BL}{6}(d_1+d_2) + \frac{2Ls}{6}(d_1^2+d_2^2+d_1d_2)$

$= \frac{BL}{2}(d_1+d_2) + \frac{Ls}{3}(d_1^2+d_2^2+d_1d_2)$

$= \left\{B\left(\frac{d_1+d_2}{2}\right) + s\left(\frac{d_1^2+d_2^2+2d_1d_2}{3}\right)\right\} \times L$

= [Sec. Area of central portion + Sec. Area of side slope portions] × Length.

Ex.1 Calculate the quantity of earthwork for 200 metre length for a portion of a road in an uniform ground the heights of banks at the two ends being 1.00m and 1.60 m. The formation width is 10 metre and side slope 2:1 (Horizontal : Vertical). Assume that there is no transverse slope.

By method I

Quantity = $(Bd + sd^2) \times$ Length

$= (10 \times 1.3 + 2 \times 1.3^2) \times 200$

$= (13 + 3.38) \times 200$

$= 16.38 \times 200 = 3276$ cu.m.

$B = 10m, s = 2, L = 200m$

d = mean depth $= \frac{1.00+1.60}{2} = 1.30m$

By method II –

A_1 = sec. area at one end $= Bd_1 + sd_1^2 = 10 \times 1 + 2 \times 1^2 = 12$ sq.m

A_2 = sec. area at other end $= Bd_2 + sd_2^2 = 10 \times 1.60 + 2 \times 1.6^2 = 21.12$ sq.m.

A_m = Mid. sec. area

$= Bd_m + sd_m^2$ where $d_m = \frac{d_1+d_2}{2} = \frac{1.00+1.60}{2} = 1.30$ m

$= 10 \times 1.30 + 2 \times 1.30^2 = 16.38$ sq.m

$\therefore$ Quantity $= \frac{200}{6}(12 + 21.12 + 4 \times 16.38) = \frac{200}{6} \times 98.64$

$= \frac{19728}{6} = 3288$ cu.m.

Ex.2 (i) Calculate the area of the side slopes of portion of a bank for a length of 200 metre the heights of banks at the two ends being 2.50m and 3.50m and the ratio of the side slope 2:1.

(ii) If the side slopes are to be provided with 15 cm thick stone pitching, calculate the cost of pitching at the rate of Rs. 150/- per cu.m.

(i) Mean height $d = \frac{2.5+3.5}{2} = 3m$

sloping breadth at the mid-section $= d\sqrt{(s^2+1)} = 3\sqrt{(2^2+1)} = 6.71$

Area of the two side slopes $= 2L \times d\sqrt{(s^2+1)} = 2 \times 200 \times 6.71 = 2684$ sq.m

Scanned by CamScanner

(iii) Quantity of pitching = Area x thickness = 2684 x 0.15 = 402.6 cu.m.
Cost of stone pitching = 402.6 x 150.00 = Rs. 60390.00

Conveyance Allowance:
When the duty of a government servant is such that it requires extensive travelling at or within a short distance from his headquarters for which no travelling allowance is ordinarily admissible, and he maintains a some sort of conveyance for efficient discharge of his officials functions, a Conveyance Allowance per month is granted by the competent authority. The conveyance may be a car, a motor cycle, or a cycle according to the class of officer, and the allowance is meant for the maintenance and up keep of the conveyance. In the monthly bill a certificate to the effect that the type of conveyance is maintained in a satisfactory condition is to be given. If the officer travels longer distance and draws travelling allowance kilometre (mileage) basis, then his monthly conveyance allowance for that day should be deducted If the duties of the government is such that he is required to maintain a horse, the conveyance granted to him is known as Horse Allowance.

Conveyance charges means the charges made by the Licensee for the conveyance of gas, "conveyance services" means all services provided by the Licensee of conveying gas through and within the Licensed Area. "Formula Year" means a year commencing on 1st January. "Network Code" means the network code as prepared by the Licencee

Conveyance charges means the stamp duty and the registration charges as per provision of the Applicable Laws and all incidental and legal costs and expenses for preparation and execution of the Sub-Lease Deed for the transfer of ownership of the Apartment in favour of the Applicant upon completion/Part completion of the Apartment and clearance of all dues in terms hereof to the company.

Royalty charges: A royalty charge is a payment that a licensee makes to a licensor in exchange for the use of their licenced asset. In construction, this asset could be a new technology, product, system, material or design, perhaps incorporating intellectual property assets like patents, know-how and trademarks.
Royalty charges are usually agreed as a percentage of sales generated by the licensed asset. In some circumstances, they are set as a fixed price. Royalty are charged on an ongoing basis
The amount that the licensee must pay is outlined in a royalty agreement. This agreement also specifies how the licensee may use the licensed asset where they can use it and for how long.

Scanned by CamScanner

Abstract cost of estimate

The cost of each item of work is calculated in a tabular form from the quantities already computed and total cost is worked out in Abstract of Estimate form. The rates of different items of work are taken as per schedule of rates etc current workable rates or analysed rates for finished items of work, A percentage usually 3% of the estimated cost is added to allow for contigencies for miscelaneous petty items which do not come under any classified head of items of work and a percentage of about 2% is provided for work charged establishment The Grand Total thus obtained gives the estimated cost of work.

The detailed estimate is usually prepared work-wise, under each sub-work as main building, servants quarters, garage, boundary walls, etc.

The detailed estimate is accompanied with:-

(1) Report
(2) General specifications
(3) Detailed specifications
(4) Drawing: plan, elevation, Sectional elevations, Detailed drawings, site plan or layout plan or index plan etc.
(5) Calculation and designs - Designs of foundation, beam, slab, lintel, design of channel in case of irrigation channel, design of thickness of metal crust in case of road etc.
(6) Analysis of rates, if rates are not as per schedule of rates or for the non schedule items.

Valuation :- Valuation is the technique of estimating or determining the basic price or value of a property such as a building, a factory, other engineering structure of various types, land, etc. By valuation the present value of a property is determined. The present value of property may be decided by its selling price, or income or rent it may fetch. The value of property depends on its structure, life, maintenance, location bank interest, legal control, etc. The value also depends on supply on demand and the purpose for which valuation is required.

Cost means original cost of construction of purchase, while values means the present value (saleable value) which may be higher or lower than the cost. A building whole cost of construction is Rs. 50,000.00, when put for sale may fetch Rs. 60,000.00 this sale price is the value of the building. Similarly, the value may be less than the original cost.

Purpose of valuation.- The main purpose of valuation are as follows

(i) Buying or Selling Property :- When it is required to buy or to sell a property, its valuation is required.

(ii) Taxation - To assesses the tax of a property its valuation is required Taxes may be Muncipal Tax, Wealth Tax, Property Tax, etc. and all the taxes are fixed on the valuation of the property.

(iii) Rent fixation :- In order to determine the rent of a property, valuation is required. Rent is usually fixed on certain percentage of the amount of valuation (6% to 10% of the valuation).

(iv) Security of loans on Mortgage :- When loans are taken against the security of the property, its valuation is required.

(v) Compulsory acquisition :- whenever a property is acquired by law compensation is paid to the owner. To determine the amount of compensation valuation of the property is required

(vi) Valuation of a property is also required for Insurance, Betterment charges, specifications, etc.

Cost is the amount incurred in producing and maintaining the product. Value is the utility of a good or service for a customer. By valuation the present value of a property is defined. The present value of property may be decided by its selling price, or income or rent it may fetch. The value of property

Scanned by CamScanner

depends on its structure, life, maintenance, location, bank interest etc. Cost means original cost of construction of purchase.

Scrap value: Scrap value is the value of dismantled materials. For a building when the life is over at the end of its utility period the dismantled materials as steel, bricks, timber, etc. will fetch a certain amount which is the scrap value of the building. In the case of machine the scrap value is the value of the metal only or the value of the dismantled parts. The scrap value of a building may be taken 10% of its total cost of construction. The cost of dismantling and removal of the rubbish material is deducted from the total receipt from the sale of the useable materials to get the scrap value.

Salvage value: It is the value at the end of the utility period without being dismantled. A machine after the completion of its usual span of life on which it become uneconomic may be sold and one may purchase the same for use for some other purpose the sale value of the machine is the salvage value. It does not include the cost of removal, sale, etc.

Normally, the scrap value, or the salvage value of a property or an asset has got some positive figure, but it may also be zero or negative. As for example the scrap value of a ~~[illegible]~~ structure will be negative, as dismantling and removal will be costly.

Assess value: For the purpose of taxation, a property is assessed for its monetary worth. This ascertained price is known assessed value.

This assessment is done at an annual basis, considering factors such as property values and market conditions in neighbouring areas. Government agencies like Municipal Corporation conduct this assessment for measuring applicable of property taxes based on the monetary value of the property.

Insurance companies may not use these valuations for indemnities etc. In general, this assessed value tends to be less than the basis on actual market price of the property.

Sinking fund: The fund which is gradually accumulated by way of periodic or annual deposit for the replacement of the building or structure at the ends of its useful life, is termed as sinking fund. The object of creating sinking fund is to ~~accurate~~ accumulate sufficient money to meet the cost of construction or replacement of the building or structure after its utility period. The sinking fund is created by regular annual or periodic deposits in compound interest bearing investment, which will form the amount of replacement at the end of the utility period of the property. The sinking fund may be created by taking a sinking fund policy with an insurance company or by depositing in bank to collect highest compound interest. The calculation of sinking fund depends on the life of the building and scrap value of the building for the cost of old materials. The cost of land is not taken into account in calculating. Sinking fund as land remains intact.

The sinking fund may also be required for payment of loan. If a property is owned or constructed by taking loan a sinking fund may be created by setting a sum of money annually to accumulate with compound interest in order to repay the debt at the end of the term of loan. The amount thus set aside is also known as Annuity payment. The amount which will be set aside may also be paid directly to lender by way of annual instalment. The amount of annual instalment of the sinking fund may be found out by the formula.

$I = \frac{Si}{(1+i)^n - 1}$, where S = total amount of sinking fund to be accumulated,

n - number of years required to accumulate the sinking fund

i - rate of interest in decimal (e.g. 5% = 0.05), and I = annual instalment required

Scanned by CamScanner

Ex.1 A pumping set with a motor has been installed in a building at a cost of Rs. 2,500.00. Assuming the life of the pump as 15 years, work out the amount of annual installment of sinking fund required to be deposited to accumulate the whole amount of 1 compound interest.

The annual sinking fund $I = \frac{S_i}{(1+i)^n - 1} = \frac{2500 \times 0.04}{(1+0.04)^{15}-1} = 2500 \times 0.05 = Rs.\ 125$

The owner is to deposit Rs. 125/- annually in 4% compound interest carrying investment for 15 years to accumulate Rs. 2,500/-

Ex.2 An old building has been purchased by a person at a cost of Rs. 30,000/- excluding the cost of the land. Calculate the amount of annual sinking fund at 4% interest assumin the future life of the building as 20 years and the scrap value of the building as 10% of the cost of purchase.

The total amount of sinking fund to be accumulated at the end of 20 years,

$S = 3000 \times \frac{90}{100} = Rs.\ 27,000.00$

Annual instalment of sinking fund. $I = \frac{S_i}{(1+i)^n - 1} = \frac{27000 \times 0.04}{(1+0.04)^{20}-1}$

Annual instalment for sinking fund required for 20 years $= 27000 \times 0.0336 = Rs.\ 907.20$ $= Rs.\ 967.20$

Depreciation:- Depreciation is the gradual exhaustion of the usefulness of a property This may be defined as the decrease or loss in the value of a property due to structural deterioration use, like wear and tear, decay and obsolescence. The value of a building or structure will be gradually reduced due to its use, like, wear and tear etc. and a certain percentage of the total cost may be allowed as depreciation to determine its present value. Usually a % on depreciation per annum is allowed. The general annual decrease in the value of a property is known as Annual depreciation. Usually, the percentag rate of depreciation is less at the beginning and gradually increase during later years.

The amount of depreciation being known, the percentage value of a propert can be calculated after deducting the total amount of depreciation from the origina cost.

Method of calculating depreciation:- The various methods of calculating depreciation are as follows:-

i) Straight line method- 2) Constant percentage method, 3) Sinking fund method 4) Quantity survey method

In all these methods, it is necessary to decide the economic or effective life of the property.

(1) Straight line method: In this method it is assumed that the property loses its value by the same amount every year. A fixed amount of the original cost is deducted every year, so that at the end of the utility period only the scrap value is left

Annual depreciation $D = \frac{\text{Original cost} - \text{scrap value}}{\text{life in year}} = \frac{C-S}{n}$

where C - original cost, S - scrap value, n - life of the property in years and D - annual depreciation. The book value after the number of years, say N years = original cost $- N \times D$.

(2) Constant percentage method or Declining balance method:

In this method, it is assumed that the property will lose its value by a constant percentage of its value at the beginning of every year.

Annual depreciation, $D = 1 - \left(\frac{S}{C}\right)^{1/n}$, where i, S, n and D have the same meanin as above

The value of the property of the depreciated cost at the end of the first year

$= C - DC = C_1$

The value of the property at the end of the 2nd year $= C_1 - DC_2$ and so on

The value of the property on the depreciated cost at the end of the n year

Scanned by CamScanner

$= C\left(\frac{s}{c}\right)^{min}$

The formula will fail when $s=0$. When the ratio $\frac{s}{c}$ is very small, the depreciation for the first year will be considerable.

(3) Sinking fund method:- In this method the depreciation of property is assumed to be equal to the annual sinking fund plus the interest on the fund for that year, which is supposed to be invested on interest bearing investments. If A is the annual sinking fund and b, c, d, etc. represents interest on the sinking fund for subsequent years, and C = total original cost, then —

At the end of	Depreciation for the year	Total depreciation	Book value
1st year	A	A	C-A
2nd year	A+b	2A+b	C-(2A+b)
3rd year	A+c	3A+b+c	C-(3A+b+c)
4th year	A+d	4A+b+c+d	C-(4A+b+c+d)
			so on

(4) Quantity survey method:- In this method the property is studied in detail and loss in value due to life, wear and tear, decay, obsolescence, etc. worked out. Each and every step is based on some logical ground without any fixed percentage of the cost of the property. Only experienced valuers can work the amount of depreciation and present value of a property by this method.

Obsolescence:- The value of property or structures becomes less by its becoming out of date in style in structure in design, etc. and this is termed as obsolescence. An old dated building with massive walls, arrangements of rooms not suited in present days and for similar reasons, becomes obsolete even if it is maintained in a very good condition and its value becomes less due to obsolescence. The obsolescence may be due to the reasons such as progress in arts, change in fashions, changes in planning ideas, new inventions, improvements in design technique, etc. A machine of old design may become obsolete, though it may be in good running condition and its value will be less. Thus, though the property is physically sound, it may become functionally inadequate and its economical return becomes less.

Scanned by CamScanner

Administrative set up and hierarchy of Engineering Department in different level.

Office of the Engineer-in-chief (civil):-

This is the head of department office and functioning under Government of Odisha, Works Department. There are ten Circle officers (seven civil, one P.H., one electrical and one mechanical) functioning under this Organization. There are 36 Civil Divisions 2 G.I.P.H. Division, 4 General Electrical Divisions and 4 Mechanical Divisions are functioning under the above Circle offices, Sub-Divisional officers and section officers are also functioning under the above Divisional Offices.

The Engineer-in-chief (civil) is the head of the Organization. Three chief Engineers designated as chief Engineer, (DPI & Roads), chief Engineer, Buildings and chief Engineer, World Bank are functioning under the office.

Design planning and Investigation & Roads

The Design and planning activity in the organization is provided through a separate Design, planning and Investigation Wing in the Odisha Works Department. Its head the chief Engineer, Design planning and Investigation and Road (CE(DPI & R) has a reporting responsibility to the EIC-cum-Secretary.

Buildings:

In addition to responsibilities for roads, odisha works department has the task of supervising the construction and maintenance of public buildings on behalf of a wide range of state Government Organizations. For this purpose, the organization structure of odisha works department includes a specific wing devoted to this activity. It is headed by a chief Engineer Buildings (CE(B)) reporting to the EIC cum-Secretary.

World Bank Project:

Odisha state Road Project (O.S.R.P.) is a world Bank funded Project implemented by Works Department (OWD) of 6100. The project Development objective (PDO) is to remove transport bottlenecks in targeted transport corridors for greater investment and economic and social development activities in the states of odisha. The project Management Unit (PMU), headed by chief Engineer (WBP) is located at Nirman Soudh, Unit-5, Bhubaneswar

National Highways:

Responsibility for new construction and maintenance works on the National Highway is under the control of the chief engineer national highways (CE NH). The CE (NH) reports to MOST for works carried out on the National Highway network.

Research Development and Quality Promotion

Inspection and Quality control activity is under the control of the chief Engineer Research Development and Quality Promotion (CE (RD & QP). It was established as a Research Laboratory in 1965 to cater to the need for testing of materials involved in road and building construction. This wing's functions expanded in 1982 to include a research development and quality promotion cell.

Odisha Bridge Construction Corporation

Odisha Bridge & construction corporation Limited (OBCC) was incorporated on 01.01.1983 under Companies Act, 1956 as a Govt. Company. It is a Government Company sponsored by Odisha state Government within the meaning of section 617 of the companies Act. Since its inception, it is working as a Govt. of Odisha undertaking Organisation. The corporation is governed by Managing Director on behalf of Board of Director nominated by the Govt. under guidelines set by Memorandum of Association and articles of Association along with work rules mentioned therein.

Office of the chief Architect:

The office of the chief Architect is working as an independent Head of Department under the administrative control of Works Department and looks after the architectural ~~works~~ matters of the state of Odisha. Besides the above, the said office also prepares architectural project drawing for work Department and also for other Department. This wing is headed by EC (Architect)

Scanned by CamScanner

State Procurement Cell

With the objective of supervision of full roll out of e-procurement in the four Engineering Departments of the state, Government have constituted the "State Procurement Cell" under the administrative control of works department with LIC (Civil), Odisha as the chief Procurement officer vide Works Department O.M. No 8909 dt. 06.05.2020. This wing is headed by chief Engineer cum chief Manager (Tech) of the State Procurement Cell, Govt. of Odisha.

Duties responsibility of chief engineer:

→ Communicating the goals of the company to all engineers and professional in the team.
→ Supervising every phase of the project from start to completion
→ Calculating costs, material, labor, and time required for each project.
→ Approving designs and budgets
→ Delegating tasks to engineering teams
→ Supervising staff training as well as equipment installation.
→ Performing quality control checks on all systems and products
→ Quickly resolving disputes between staff
→ Acknowledging or rewarding good work.
→ Analyzing data and drafting reports for review.

Duties and responsibility of the Junior Engineers

→ To keep detail history of all roads, culverts bridges and building which belong to his jurisdiction alongwith Row of road, conditions of roads, bridges, culverts & buildings.
→ To maintain a register with the work which has executed over the roads, bridges, culverts and building premises or any other structure with relevant data like, Mouza Map, Right of way for road stretches, Road furniture, trees, schemes as well as technical details of the asset, as built drawings, nature of any work executed over the asset or its portion, date of completion of the work, end date of defect liability period (DLP) according to the contract for said work, condition of the asset during defect liability period, Name of agency with his contract reference. This register will be road wise/building wise. He is to update asset register on regular basis keeping all relevant drawings linked with the asset in safe custody.
→ To inspect every road/bridge/culvert/building on periodic basis. He should maintain a register to keep record as per his inspection and observation. For road stretches this inspection will be biweekly basis during monsoon period. If he observes any irregularities as and when identified.
→ To watch whether any untoward matters including encroachment are going on the roads or building premises. If he observes it, he should take suitable steps towards it and informs to his higher Authority.
→ To prepare all the preliminary & detailed estimates for original works, periodical maintenance, addition and alteration as well as modernization as directed by his higher authorities, inclusive of scheduled & Non schedule items with proper analysis of rates, rough drawing, site plan by collecting engineering data and drawings and submit those estimates to his immediate superior authority for approval from competent authority.
→ To survive and see that all works under his charge are done according to the specifications drawings, standards by down in contract agreements tender schedule of works and approved samples by engineer in charge. He is expected to remain at site throughout in order to see that the works are executed properly in accordance with the requirements, standards and approved samples. It is the duty of the Junior Engineer to bring it at once to the notice of immediate superior authority and also make a note in the site order book if any work is not done by a Contractor maintaining

Scanned by CamScanner

stipulated period, specifications, requirement, drawings, standards laid down and approved samples including quality of materials.
→ To work the level of areas where earthwork or similar type of work is under execution and prepare volumetric calculation sheets for quantitative analysis and lead charts, etc.
→ To carry out test of materials like cement, steel, bitumen, metal, wood, soil, aggregates or any other materials as directed by higher authorities and item of works as specified in contract agreement of works, maintain register of testing of each and every item separately and place to his immediate superior authority to make a note in the register.
→ To arrange and issue materials, T&P to contractors/workers at the proper time so that there is no obstruction in the execution of work.
→ To keep Government materials, T&P in his custody and care, maintain proper accounts of receipts, issues and balances, arrange adequate watch and ward.

Duties of Assistance Engineer:
→ Designing construction projects by studying project concept, architectural drawings and models.
→ Preparing engineering design by collecting and studying reports, maps, drawings, blueprints, aerial photographs and tests on soil composition, terrain, hydrological characteristics and related topographical and geologic data.
→ Determining project costs by calculating labor, material, and related costs.
→ Preparing feasibility study by analyzing engineering design, conducting environmental impact studies, assembling data.
→ Preparing engineering documents by developing construction specifications, plans and schedules.
→ Resolving design and development problems
→ Managing budgets and project resources
→ Scheduling material and equipment purchases and deliveries
→ Making sure the project complies with legal requirements, especially health and safety.
→ Continuing adherence to construction specifications and safety standards by monitoring project progress, inspecting construction site, verifying calculations and placements.
→ Fulfilling project requirements by training and guiding operators
→ Maintaining operations by enforcing project and operational policies and procedures.
→ Providing engineering information by answering questions and requests.

Scanned by CamScanner